GRIDWORX®

High Impact Plastic Shims

Plastic components that provide the installer flexibility when plumbing the horizontal rails. Also acts as a bond breaker between the concrete substrate and aluminum rail.

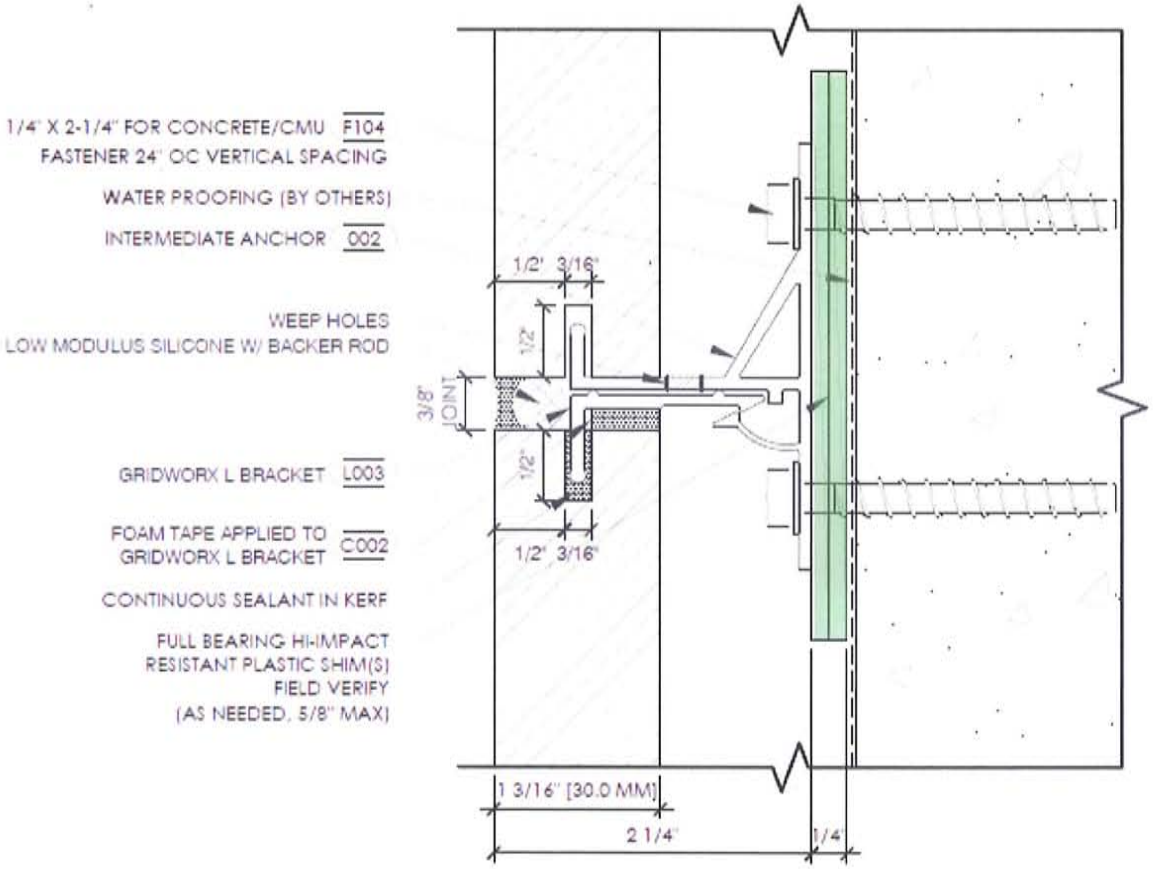

NORYL* Resin SE1GFN3

Americas: COMMERCIAL

PPE+PS blend. 30% Glass reinforced. Non-brominated, non-chlorinated FR system. UL94 V1 listing. RTI 110/105/110. Dielectric strength. Dimensional stability. Suitable for E/E applications.

TYPICAL PROPERTIES [1]	TYPICAL VALUE	UNIT	STANDARD
MECHANICAL			
Tensile Stress, brk, Type I, 0.2 in/min	17400	psi	ASTM D 638
Tensile Strain, brk, Type I, 0.2 in/min	5	%	ASTM D 638
Flexural Stress, yld, 0.10 in/min, 4 in span	24900	psi	ASTM D 790
Flexural Modulus, 0.10 in/min, 4 in span	1129000	psi	ASTM D 790
Hardness, Rockwell L	108	-	ASTM D 785
IMPACT			
Izod Impact, notched, 73°F	2.2	ft-lb/in	ASTM D 256
Izod Impact, notched, -40°F	1.8	ft-lb/in	ASTM D 256
THERMAL			
HDT, 66 psi, 0.250 in, unannealed	285	°F	ASTM D 648
HDT, 264 psi, 0.250 in, unannealed	275	°F	ASTM D 648
CTE, flow, -40°F to 200°F	1.4E-05	1/°F	ASTM E 831
Relative Temp Index, Elec	110	°C	UL 746B
Relative Temp Index, Mech w/impact	105	°C	UL 746B
Relative Temp Index, Mech w/o impact	110	°C	UL 746B
PHYSICAL			
Specific Gravity	1.31	-	ASTM D 792
Water Absorption, 24 hours @ 73°F	0.06	%	ASTM D 570
Mold Shrinkage, flow, 0.125" (5)	0.1 - 0.4	%	SABIC Method
ELECTRICAL			
Dielectric Strength, in oil, 125 mils	530	V/mil	ASTM D 149
Relative Permittivity, 50/60 Hz	3.15	-	ASTM D 150
Dissipation Factor, 50/60 Hz	0.002	-	ASTM D 150
Arc Resistance, Tungsten {PLC}	6	PLC Code	ASTM D 495
Hot Wire Ignition {PLC}	0	PLC Code	UL 746A
High Voltage Arc Track Rate {PLC}	4	PLC Code	UL 746A
High Ampere Arc Ign, surface {PLC}	2	PLC Code	UL 746A
Comparative Tracking Index (UL) {PLC}	3	PLC Code	UL 746A
FLAME CHARACTERISTICS			
UL Recognized, 94V-1 Flame Class Rating (3)	0.058	in	UL 94

1) Typical values only. Variations within normal tolerances are possible for various colours.All values are measured at least after 48 hours storage at 230C/50% relative humidity.
All properties, except the melt volume rate are measured on injection moulded samples.
All samples are prepared according to ISO 294.

2) Only typical data for material selection purpose.Not to be used for part or tool design.
3) This rating is not intended to reflect hazards presented by this or any other material under actual fire conditions.
4) Own measurement according to UL.
5) Measurements made from laboratory test coupon. Actual shrinkage may vary outside of range due to differences in processing conditions, equipment, part geometry and tool design. It is recommended that mold shrinkage studies be performed with surrogate or legacy tooling prior to cutting tools for new molded article.
6) Needs hard coat to consistently pass 60 sec Vertical Burn.

Source, GMD, Last Update:04/14/2003

PLEASE CONTACT YOUR LOCAL SALES OFFICE FOR AVAILABILITY IN YOUR AREA DISCLAIMER : THE MATERIALS AND PRODUCTS OF THE BUSINESSES MAKING UP THE SABIC INNOVATIVE PLASTICS COMPANY, ITS SUBSIDIARIES AND AFFILIATES ("SABIC IP"), ARE SOLD SUBJECT TO SABIC IP' S STANDARD CONDITIONS OF SALE, WHICH ARE INCLUDED IN THE APPLICABLE DISTRIBUTOR OR OTHER SALES AGREEMENT, PRINTED ON THE BACK OF ORDER ACKNOWLEDGMENTS AND INVOICES, AND AVAILABLE UPON REQUEST. ALTHOUGH ANY INFORMATION, RECOMMENDATIONS, OR ADVICE CONTAINED HEREIN IS GIVEN IN GOOD FAITH, SABIC IP MAKES NO WARRANTY OR GUARANTEE, EXPRESS OR IMPLIED, (I) THAT THE RESULTS DESCRIBED HEREIN WILL BE OBTAINED UNDER END-USE CONDITIONS, OR (II) AS TO THE EFFECTIVENESS OR SAFETY OF ANY DESIGN INCORPORATING SABIC IP MATERIALS, PRODUCTS, RECOMMENDATIONS OR ADVICE. EXCEPT AS PROVIDED IN SABIC IP' S STANDARD CONDITIONS OF SALE, SABIC IP AND ITS REPRESENTATIVES SHALL IN NO EVENT BE RESPONSIBLE FOR ANY LOSS RESULTING FROM ANY USE OF ITS MATERIALS OR PRODUCTS DESCRIBED HEREIN. Each user bears full responsibility for making its own determination as to the suitability of SABIC IP' s materials, products, recommendations, or advice for its own particular use. Each user must identify and perform all tests and analyses necessary to assure that its finished parts incorporating SABIC IP materials or products will be safe and suitable for use under end-use conditions. Nothing in this or any other document, nor any oral recommendation or advice, shall be deemed to alter, vary, supersede, or waive any provision of SABIC IP' s Standard Conditions of Sale or this Disclaimer, unless any such modification is specifically agreed to in a writing signed by SABIC IP. No statement contained herein concerning a possible or suggested use of any material, product or design is intended, or should be construed, to grant any license under any patent or other intellectual property right of SABIC Innovative Plastics Company or any of its subsidiaries or affiliates covering such use or design, or as a recommendation for the use of such material, product or design in the infringement of any patent or other intellectual property right

* NORYL is a trademark of the SABIC Innovative Plastics Company

© 1997-2017 SABIC Innovative Plastics Company.All rights reserved

STEEL SUPPLY

PLASTIC SHIM COMPRESSION TEST

The below listed shims were loaded in Compression until permanent deformation occurred with results as follows **:

Part Number	Dimensions – Inches	Color	Piece # 1 LBS / shim	Piece # 2 LBS / shim
402-1 x 1/16	1-1/2 x 2 x 1/16	Blue	30,000	30,000
402-1 x 1/8	1-1/2 x 2 x 1/8	Red	22,000	22,500
402-1 x 1/4	1-1/2 x 2 x 1/4	Black	12,500	12,500
402-2 x 1/16	2-5/16 x 3 x 1/16	Blue	52,000	52,500
402-2 x 1/8	2-5/16 x 3 x 1/8	Red	40,000	42,000
402-2 x 1/4	2-5/16 x 3 x 1/4	Black	22,500	22,500
402-2 x 3/8	2-15/16 x 3 x 3/8	White	12,500	12,500
402-3 x 1/16	1-1/2 x 3-1/2 x 1/16	Blue	50,000	50,000
402-3 x 1/8	1-1/2 x 3-1/2 x 1/8	Red	27,500	26,000
402-3 x 1/4	1-1/2 x 3-1/2 x 1/4	Black	13,000	13,500
402-3 x 3/8	1-1/2 x 3-1/2 x 3/8	White	15,000	15,000
402-4 x 1/16	1-7/8 x 2-5/8 x 1/6	Blue	32,000	33,000
402-4 x 1/8	1-7/8 x 2-5/8 x 1/8	Red	22,000	22,000
402-4 x 1/4	1-7/8 x 2-5/8 x 1/4	Black	15,000	15,000
402-6 x 1/32	3 x 4 x 1/32	Green	127,000	127,000
402-6 x 1/16	3 x 4 x 1/16	Blue	95,000	95,000
402-6 x 1/8	3 x 4 x 1/8	Red	75,000	75,000
402-6 x 1/4	3 x 4 x 1/4	Black	70,000	70,000
402-6 x 3/8	3 x 4 x 3/8	White	45,000	42,500
402-6 x 1/2	3 x 4 x 1/2	Brown	30,000	32,000
402-6 x 5/8	3 x 4 x 5/8	Purple	30,000	30,000
402-6 x 3/4	3 x 4 x 3/4	Blue	30,000	30,000
402-6W x 1/4	3 x 4 x 1/4 to 1/16	Tan	100,000	100,000
402-9 x 1/16	4 x 6 x 1/16	Blue	200,000	200,000
402-9 x 1/8	4 x 6 x 1/8	Red	187,000	187,000
402-9 x 1/4	4 x 6 x 1/4	Black	135,000	135,000
402-9 x 3/8	4 x 6 x 3/8	White	100,000	100,000
402-9 x 1/2	4 x 6 x 1/2	Brown	90,000	90,000
444-1 x 1/4	1-1/2 x 3-3/8 x 1/4 to 1/32	Black	27,000	27,000
444-2 x 3/8	1-1/2 x 6 x 3/8 to 1/32	Black	50,000	50,000
444-3 x 1/4	1-1/2 x 8 x 1/4 to 1/16	Black	75,000	75,000
424-1 x 1/16	1-7/8 x 3-1/8 x 1/16	Black	120,000	123,000
424-2 x 1/16	1-7/8 x 3-5/8 x 1/16	Black	130,000	130,000
424-3 x 1/16	1-7/8 x 5-1/8 x 1/16	Black	145,000	145,000
424-1 x 1/32	1-7/8 x 3-1/8 x 1/32	Black	135,000	135,000
460-2 x 2 x 1/6	2 x 2 x 1/16	Black	90,000	93,000
460-2 x 2 x 1/8	2 x 2 x 1/8	Black	65,000	72,500
460-2 x 2 x 1/4	2 x 2 x 1/4	Black	45,000	45,000
460-2 x 2 x 3/8	2 x 2 x 3/8	Black	15,000	15,000
460-2 x 4 x 1/16	2 x 4 x 1/16	Black	95,000	97,000
460-2 x 4 x 1/8	2 x 4 x 1/8	Black	80,000	80,000
460-2 x 4 x 1/4	2 x 4 x 1/4	Black	35,000	35,000

460-2 x 4 x 3/8	2 x 4 x 3/8	Black	25,000	25,000
Part Number	**Dimensions – Inches**	**Color**	**Piece # 1 LBS / shim**	**Piece # 2 LBS / shim**
460-2 x 6 x 1/16	2 x 6 x 1/16	Black	200,000	200,000
460-2 x 6 x 1/8	2 x 6 x 1/8	Black	200,000	200,000
460-2 x 6 x 1/4	2 x 6 x 1/4	Black	100,000	100,000
460-3 x 3 x 1/16	3 x 3 x 1/16	Black	78,000	80,000
460-3 x 3 x 1/8	3 x 3 x 1/8	Red	60,000	62,000
460-3 x 3 x 1/4	3 x 3 x 1/4	Black	45,000	46,000
460-3 x 3 x 3/8	3 x 3 x 3/8	Black	35,000	35,000
460-3 x 3 x 1/2	3 x 3 x 1/2	Black	25,000	25,000
460-3 x 4 x 1/2	3 x 4 x 1/2	Pink	35,000	37,500
460-4 x 4 x 1/16	4 x 4 x 1/16	Black	200,000	200,000
460-4 x 4 x 1/8	4 x 4 x 1/8	Grey	175,000	175,000
460-4 x 4 x 1/4	4 x 4 x 1/4	Black	60,000	60,000
460-4 x 4 x 3/8	4 x 4 x 3/8	White	55,000	55,000
460-4 x 4 x 1/2	4 x 4 x 1/2	Black	45,000	47,500
460-4 x 6 x 1/16	4 x 6 x 1/16	Black	200,000	200,000
460-4 x 6 x 1/8	4 x 6 x 1/8	Black	200,000	200,000
460-4 x 6 x 1/4	4 x 6 x 1/4	Black	200,000	200,000
460-4 x 6 x 3/8	4 x 6 x 3/8	Black	150,000	150,000
460-4 x 6 x 1/2	4 x 6 x 1/2	Black	115,000	110,000
460-6 x 6 x 1/16	6 x 6 x 1/16	Black	200,000	200,000
460-6 x 6 x 1/8	6 x 6 x 1/8	Black	200,000	200,000
460-6 x 6 x 1/4	6 x 6 x 1/4	Black	200,000	200,000
460-8 x 8 1/16	8 x 8 x 1/16	Black	200,000	200,000
460-8 x 8 x 1/8	8 x 8 x 1/8	Black	200,000	200,000
460-8 x 8 x 1/4	8 x 8 x 1/8	Black	200,000	200,000
460-8 x 8 x 1	8 x 8 x 1	Black	200,000	200,000

** NOTE: These measurements do not represent mill certifications. They are tests done on individual samples of one specific production run. Fabricator and/or installer should determine acceptable workloads. These measurements should be used for reference only. Horseshoe shim material is polypropylene. Other materials vary (High Impact Poly Styrene or Glass Filled ABS)

MATERIAL PROPERTIES

	Method	Polypropylene	High Impact Polystyrene
Tensile strength at break, p.s.i.	D638[b]	4500-6000	5200-7500
Elongation at break, %	D638[b]	100-600	1.2-2.5
Tensile yield strength, p.s.i.	D638[b]	4500-5400	
Comprehensive strength (rupture or yield), p.s.i.	D695	5500-8000	6000-8000
Flexural strength (rupture or yield), p.s.i.	D790	6000-8000	10,000-14,600
Tensile modules, 10^3, p.s.i.	D638[b]	165-225	330-475
Comprehensive modules, 10^3, p.s.i.	D695	150-300	480-490
Flexural modulus, 10^3, p.s.i.	73°F D790 200°F D790 250°F D790 300°F D790	170-250 50 35	380-490
Izod impact, ft-lb/in of notch (1/8" thick specimen)	D256A	0.4–1.2	0.35-0.45
Hardness Rockwell Shire/Barcol	D785	R80-102 D2240/D2583	M60-75

All of our plastic shims are manufactured in the United States with recycled plastic material.
The recycled plastic content is over 98%.

THE STEEL SUPPLY COMPANY, INC
35 PINE DRIVE, COLD SPRING HARBOR, NEW YORK 11724 PHONE (631) 385-7273 FAX (631)385-7274
www.thesteelsupplyco.com

GRIDWORX®

Dow 790 Silicone

Continuous bead of silicone applied in stone kerf to provide a flexible and permanent bond between the L-bracket and stone panel. Also used to seal cladding joints.

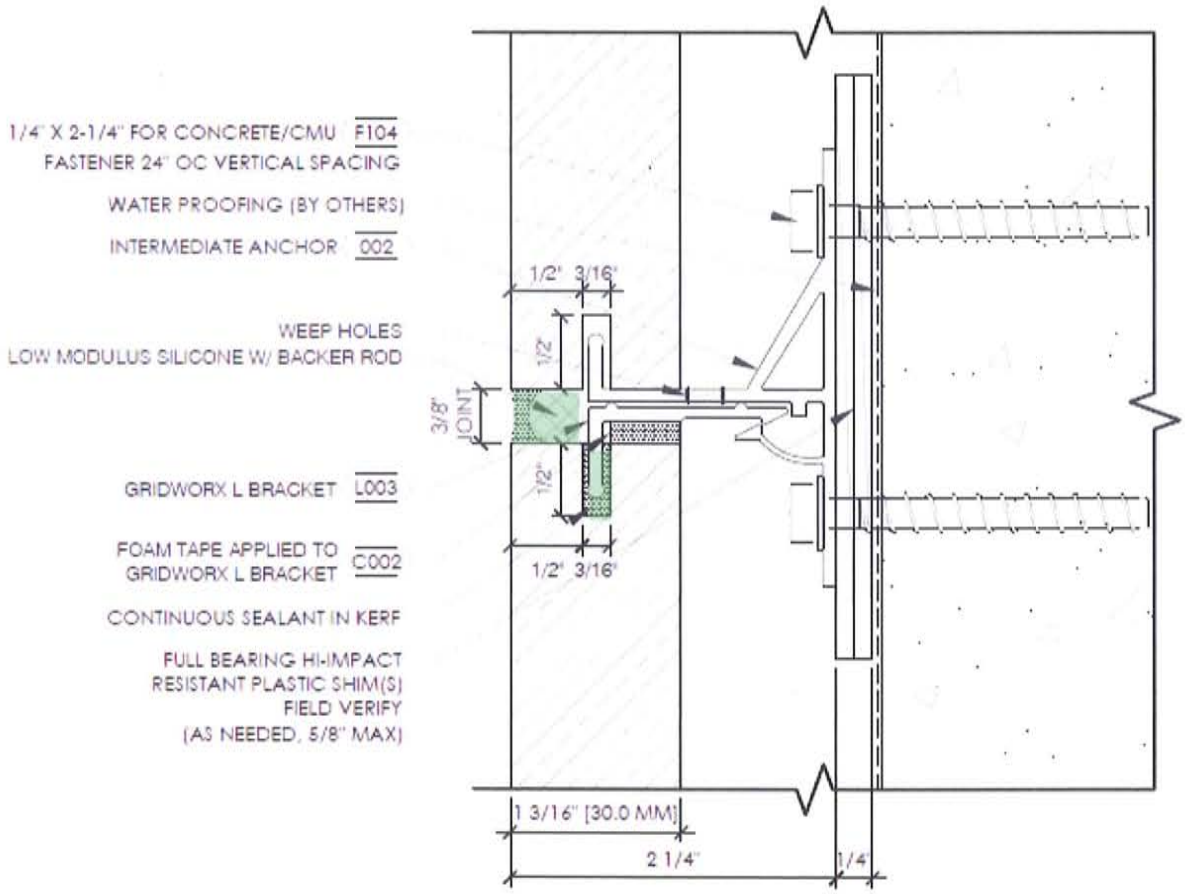

DOW CORNING

DOW CORNING CORPORATION
Material Safety Data Sheet

DOW CORNING(R) 790 SILICONE BLDG SEALANT, CUSTOM COLOR

1. PRODUCT AND COMPANY IDENTIFICATION

Dow Corning Corporation
South Saginaw Road
Midland, Michigan 48686

24 Hour Emergency Telephone: (989) 496-5900
Customer Service: (989) 496-6000
Product Disposal Information: (989) 496-6315
CHEMTREC: (800) 424-9300

MSDS No.: 04110631

Revision Date: 2013/09/23

Generic Description: Silicone Sealant
Physical Form: Paste
Color: See product name
Odor: Amine-like odor

NFPA Profile: Health 2 Flammability 1 Instability/Reactivity 0

Note: NFPA = National Fire Protection Association

2. HAZARDS IDENTIFICATION

POTENTIAL HEALTH EFFECTS

Acute Effects

Eye: Direct contact may cause severe irritation.

Skin: May cause moderate irritation.

Inhalation: Irritates respiratory passages very slightly.

Oral: Low ingestion hazard in normal use.

Prolonged/Repeated Exposure Effects

Skin: Repeated or prolonged exposure may irritate seriously.

Inhalation: No known applicable information.

Oral: Overexposure by ingestion may injure the following organ(s): Bone marrow.

Other Health Effects

This product contains a chemical(s) that has the following effect(s):
Reproductive Toxicity
Carcinogenicity

See Section 11 for specific details.

Signs and Symptoms of Overexposure

No known applicable information.

Medical Conditions Aggravated by Exposure

No known applicable information.

The above listed potential effects of overexposure are based on actual data, results of studies performed upon similar compositions, component data and/or expert review of the product. Please refer to Section 11 for the detailed toxicology information.

3. COMPOSITION/INFORMATION ON INGREDIENTS

CAS Number	Wt %	Component Name
87855-59-2	1.0 - 5.0	MethylVinyl Bis(N-ethylacetamido)Silane
68952-53-4	1.0 - 5.0	Dimethyl, methylethyl-N-hydroxyethamine siloxane
68186-85-6	<=0.4	Cobalt titanite green spinel

The above components are hazardous as defined in 29 CFR 1910.1200.

4. FIRST AID MEASURES

Eye:	Immediately flush the contaminated eye(s) with lukewarm, gently flowing water for 15 - 20 minutes while holding the eyelid(s) open. If contact lens is present, DO NOT delay irrigation or attempt to remove the lens. Take care not to rinse contaminated water into the unaffected eye or onto the face. Immediately obtain medical attention.
Skin:	As quickly as possible remove contaminated clothing, shoes and leather goods (e.g. watchbands, belts). Quickly and gently blot or brush away excess chemical. Immediately flush with lukewarm gently flowing water for 15 minutes. Completely decontaminate clothing, shoes and leather goods before reuse or discard. Obtain medical attention.
Inhalation:	If symptoms are experienced remove source of contamination or move victim to fresh air. If irritation persists, obtain medical advice.
Oral:	If irritation or discomfort occur, obtain medical advice.
Notes to Physician:	Treat according to person's condition and specifics of exposure.

5. FIRE FIGHTING MEASURES

Flash Point:	Not applicable.
Autoignition Temperature:	Not determined.
Flammability Limits in Air:	Not determined.
Extinguishing Media:	On large fires use dry chemical, foam or water spray. On small fires use carbon dioxide (CO2), dry chemical or water spray. Water can be used to cool fire exposed containers.
Fire Fighting Measures:	Self-contained breathing apparatus and protective clothing should be worn in fighting large fires involving chemicals. Determine the need to evacuate or isolate the area according to your local emergency plan. Use water spray to keep fire exposed containers cool.
Unusual Fire Hazards:	None.

6. ACCIDENTAL RELEASE MEASURES

Containment/Clean up:	Observe all personal protection equipment recommendations described in Sections 5 and 8. Wipe up or scrape up and contain for salvage or disposal. Clean area as appropriate since spilled materials, even in small quantities, may present a slip hazard. Final cleaning may require use of steam, solvents or detergents. Dispose of saturated absorbant or cleaning materials appropriately, since spontaneous heating may occur. Local, state and federal laws and regulations may apply to releases and disposal of this material, as well as those materials and items employed in the cleanup of releases. You will need to determine which federal, state and local laws and regulations are applicable. Sections 13 and 15 of this MSDS provide information regarding certain federal and state requirements.

Note: See Section 8 for Personal Protective Equipment for Spills. Call (989) 496-5900, if additional information is required.

7. HANDLING AND STORAGE

Use with adequate ventilation. Avoid eye contact. Avoid skin contact. Do not take internally.

Use reasonable care and store away from oxidizing materials. This material in its finely divided form presents an explosion hazard. Follow NFPA 654 (for chemical dusts) or 484 (for metal dusts) as appropriate for managing dust hazards to minimize secondary explosion potential.

8. EXPOSURE CONTROLS / PERSONAL PROTECTION

Component Exposure Limits

CAS Number	Component Name	Exposure Limits

68186-85-6	Cobalt titanite green spinel	Observe limits: Nickel - OSHA PEL and ACGIH TLV: TWA 1 mg/m3. Cobalt - OSHA PEL (final rule) and ACGIH TLV: TWA 0.05 mg/m3.

Engineering Controls

Local Ventilation:	None should be needed.
General Ventilation:	Recommended.

Personal Protective Equipment for Routine Handling

Eyes:	Use chemical worker's goggles.
Skin:	Wash at mealtime and end of shift. If skin contact occurs, change contaminated clothing as soon as possible and thoroughly flush affected areas with cool water. Chemical protective gloves are recommended.
Suitable Gloves:	Avoid skin contact by implementing good industrial hygiene practices and procedures. Select and use gloves and/or protective clothing to further minimize the potential for skin contact. Consult with your glove and/or personnel protective equipment manufacturer for selection of appropriate compatible materials.
Inhalation:	No respiratory protection should be needed.
Suitable Respirator:	None should be needed.

Personal Protective Equipment for Spills

Eyes:	Use proper protection - safety glasses as a minimum.
Skin:	Wash at mealtime and end of shift. If skin contact occurs, change contaminated clothing as soon as possible and thoroughly flush affected areas with cool water. Chemical protective gloves are recommended.
Inhalation/Suitable Respirator:	No respiratory protection should be needed.
Precautionary Measures:	Avoid eye contact. Avoid skin contact. Do not take internally. Use reasonable care.

Note: These precautions are for room temperature handling. Use at elevated temperature or aerosol/spray applications may require added precautions.

9. PHYSICAL AND CHEMICAL PROPERTIES

Physical Form:	Paste
Color:	See product name
Odor:	Amine-like odor
Specific Gravity @ 25°C:	1.48

Viscosity:	Not determined.
Freezing/Melting Point:	Not determined.
Boiling Point:	Not determined.
Vapor Pressure @ 25°C:	Not determined.
Vapor Density:	Not determined.
Solubility in Water:	Not determined.
pH:	Not determined.
Volatile Content:	Not determined.
Flash Point:	Not applicable.
Autoignition Temperature:	Not determined.
Flammability Limits in Air:	Not determined.

Note: The above information is not intended for use in preparing product specifications. Contact Dow Corning before writing specifications.

10. STABILITY AND REACTIVITY

Chemical Stability:	Stable.
Hazardous Polymerization:	Hazardous polymerization will not occur.
Conditions to Avoid:	None.
Materials to Avoid:	Oxidizing material can cause a reaction.

Hazardous Decomposition Products

Thermal breakdown of this product during fire or very high heat conditions may evolve the following decomposition products: Carbon oxides and traces of incompletely burned carbon compounds. Metal oxides. Formaldehyde. Silicon dioxide. Nitrogen oxides. Quartz. Sulfur oxides.

11. TOXICOLOGICAL INFORMATION

Special Hazard Information on Components

Carcinogens

CAS Number	Wt %	Component Name	
68186-85-6	<=0.4	Cobalt titanite green spinel	IARC Group 2B - Possibly Carcinogenic to Humans. Cobalt compound.

Reproductive Toxicity

CAS Number	Wt %	Component Name

87855-59-2	1.0 - 5.0	MethylVinyl Bis(N-ethylacetamido)Silane	Evidence of reproductive effects in laboratory animals.

12. ECOLOGICAL INFORMATION

Environmental Fate and Distribution

Complete information is not yet available.

Environmental Effects

Complete information is not yet available.

Fate and Effects in Waste Water Treatment Plants

Complete information is not yet available.

Ecotoxicity Classification Criteria

Hazard Parameters (LC50 or EC50)	High	Medium	Low
Acute Aquatic Toxicity (mg/L)	<=1	>1 and <=100	>100
Acute Terrestrial Toxicity	<=100	>100 and <= 2000	>2000

This table is adapted from "Environmental Toxicology and Risk Assessment", ASTM STP 1179, p.34, 1993.

This table can be used to classify the ecotoxicity of this product when ecotoxicity data is listed above. Please read the other information presented in the section concerning the overall ecological safety of this material.

13. DISPOSAL CONSIDERATIONS

RCRA Hazard Class (40 CFR 261)

When a decision is made to discard this material, as received, is it classified as a hazardous waste? No

State or local laws may impose additional regulatory requirements regarding disposal. Call (989) 496-6315, if additional information is required.

14. TRANSPORT INFORMATION

DOT Road Shipment Information (49 CFR 172.101)

Not subject to DOT.

Ocean Shipment (IMDG)

Not subject to IMDG code.

Air Shipment (IATA)

Not subject to IATA regulations.

Call Dow Corning Transportation, (989) 496-8577, if additional information is required.

15. REGULATORY INFORMATION

Contents of this MSDS comply with the OSHA Hazard Communication Standard 29 CFR 1910.1200.

TSCA Status: All chemical substances in this material are included on or exempted from listing on the TSCA Inventory of Chemical Substances.

EPA SARA Title III Chemical Listings

Section 302 Extremely Hazardous Substances (40 CFR 355):
None.

Section 304 CERCLA Hazardous Substances (40 CFR 302):
None.

Section 311/312 Hazard Class (40 CFR 370):

Acute: Yes
Chronic: Yes
Fire: No
Pressure: No
Reactive: No

Section 313 Toxic Chemicals (40 CFR 372):

CAS Number	Wt %	Component Name
68186-85-6	<=0.4	Cobalt titanite green spinel

Note: Chemicals are listed under the 313 Toxic Chemicals section only if they meet or exceed a reporting threshold.

Supplemental State Compliance Information

California

Warning: This product contains the following chemical(s) listed by the State of California under the Safe Drinking Water and Toxic Enforcement Act of 1986 (Proposition 65) as being known to cause cancer, birth defects or other reproductive harm.

None known.

New Jersey

CAS Number	Wt %	Component Name

1317-65-3	40.0 - 60.0	Limestone
70131-67-8	<=51.0	Dimethyl siloxane, hydroxy-terminated
87855-59-2	1.0 - 5.0	MethylVinyl Bis(N-ethylacetamido)Silane
68952-53-4	1.0 - 5.0	Dimethyl, methylethyl-N-hydroxyethamine siloxane
13463-67-7	<=1.2	Titanium dioxide
546-93-0	<1.0	Magnesium carbonate
1333-86-4	<=0.8	Carbon black
68186-85-6	<=0.4	Cobalt titanite green spinel
14808-60-7	<1.0	Quartz

Pennsylvania

CAS Number	Wt %	Component Name
1317-65-3	40.0 - 60.0	Limestone
70131-67-8	<=51.0	Dimethyl siloxane, hydroxy-terminated
13463-67-7	<=1.2	Titanium dioxide

16. OTHER INFORMATION

Prepared by: Dow Corning Corporation

These data are offered in good faith as typical values and not as product specifications. No warranty, either expressed or implied, is hereby made. The recommended industrial hygiene and safe handling procedures are believed to be generally applicable. However, each user should review these recommendations in the specific context of the intended use and determine whether they are appropriate.

(R) indicates Registered Trademark

GRIDWORX®

TYPE 31 UNDERCUT ANCHOR

Used to anchor cladding panel to Gridworx continuous horizontal rail

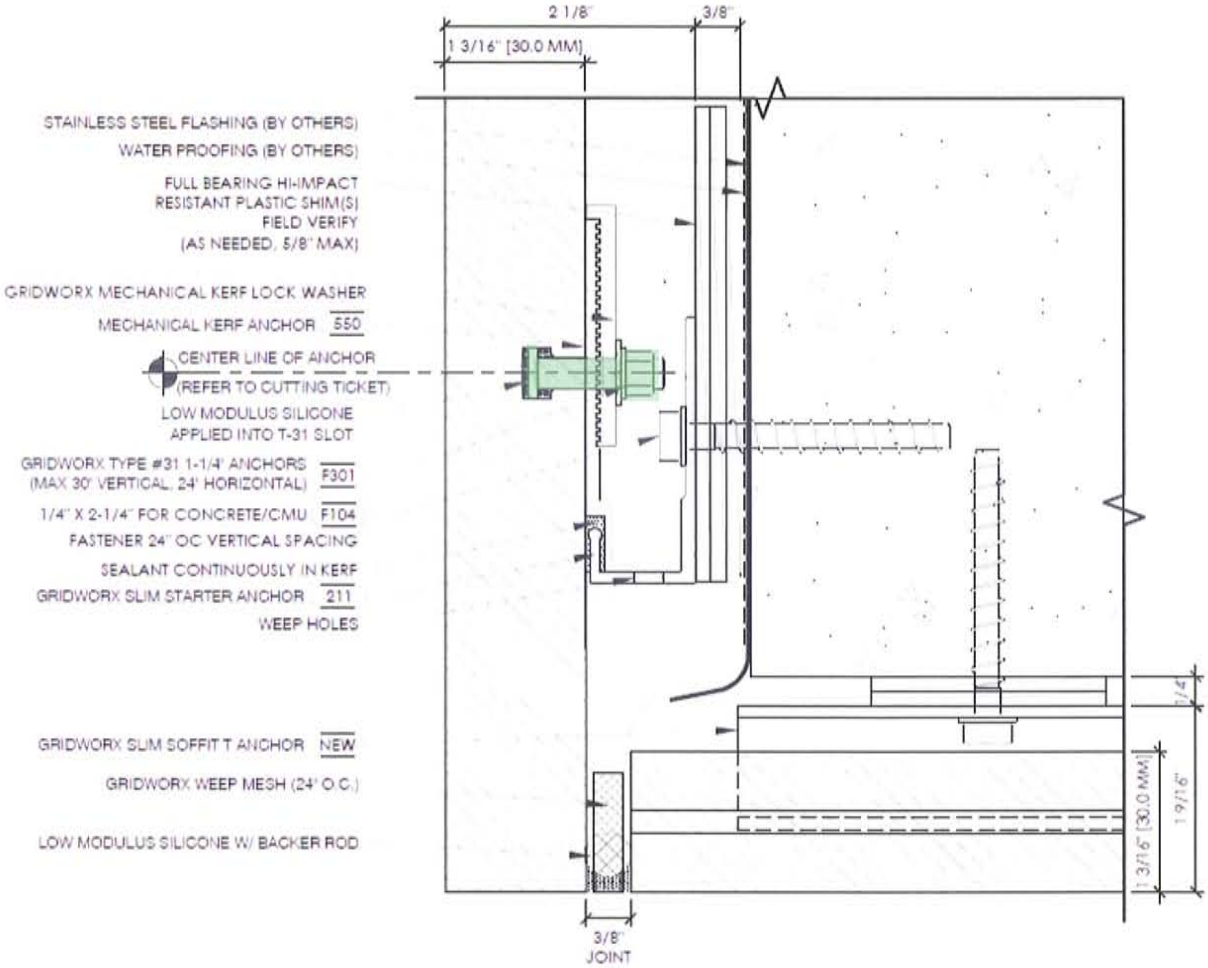

TYPE #31 ANCHOR 1/4" IC VARIES

DESCRIPTION: RESTRAINT OR SUPPORT ANCHOR USE WITH STEEL BACKED SYSTEMS.

APPLICATION: STEEL SUPPORT SYSTEMS.

TECHNICAL DATA: MATERIAL: 304 STAINLESS STEEL – 45,000 PSI MINIMUM YIELD STRENGTH
WEIGHT PER PIECE: .0295 lb – 1/4" ø X 2" LONG BOLT
.0156 lb – PER 1" OF ADDITIONAL LENGTH
.0134 lb – NUT, WASHER, AND LOCKWASHER
AVAILABLE LENGTHS: 1¼", 1½", 1¾", 2", 2¼", 2½", 3", 3½", 4", 4½", 5",6",8" SEE BELOW
MINIMUM STONE THICKNESS: 7/8"
MAXIMUM STONE THICKNESS: N/A
STONE ANCHOR CONDITION: ANCHOR IS ROTATED INTO A ROUTED SLOT CUT IN THE STONE UNTIL THREADED END IS AT A 90' ANGLE TO THE SURFACE OF THE STONE. (SEE SKETCH #31A)
MIN. & MAX. JOINT SIZE: N/A
TORQUE REQUIREMENTS: 70 TO 80 IN. LBS.

ATTACHMENT TO BACKUP: BOLT TO SUPPORT STEEL (SEE SKETCH # 31G & 31H)

SPECIAL NOTES: AT INSTALLATION #31 ANCHOR BOLT MUST BE INSERTED COMPLETELY INTO THE SLOT TO SEAT AGAINST BACK OF SLOT, SEE SKETCH #31A. SEE SKETCHES #31B AND 31C FOR MINIMUM ANCHOR-TO-ANCHOR AND ANCHOR-TO-EDGE REQUIREMENTS. JOBS REQUIRING ANCHOR LENGTHS NOT LISTED OR LARGE QUANTITIES MAY REQUIRE SPECIAL ORDERING WITH ADDITIONAL DELIVERY TIME.

U.S. PATENT NO. 4,020,610
CANADA PATENT NO. 1052122

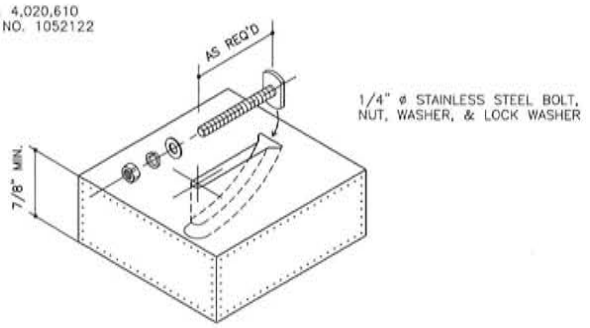

#31 ANCHOR DETAIL – 1/4"ø

Specification Drawing – CSG Engineering > M-1629
S:\Drafting\Reference Information\Anchors\Type "31" (1/4") REV L 1-21-2016

SKETCH #31A

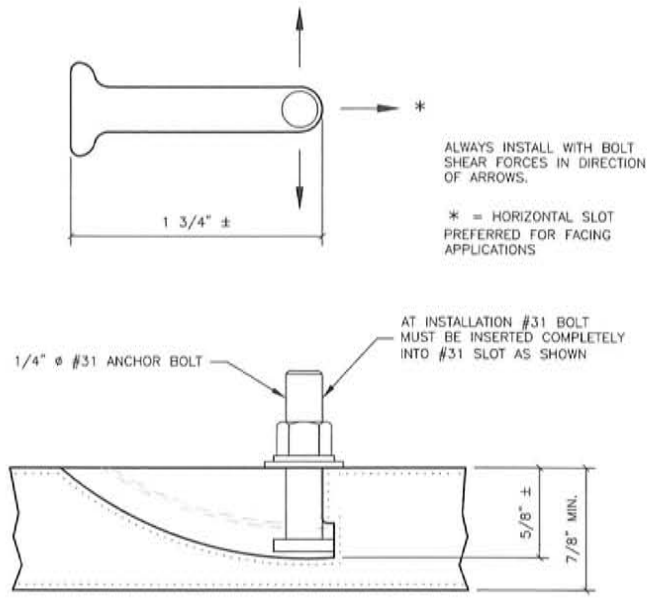

1/4"ø #31 ANCHOR SLOT DETAIL

SKETCH #31B

1/4"ø TYPE #31 ANCHOR LOCATION LIMITATIONS

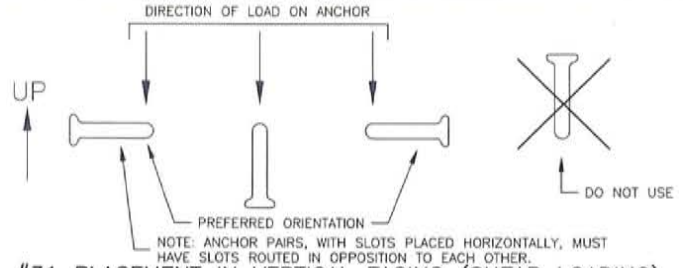

#31 PLACEMENT IN VERTICAL FACING (SHEAR LOADING)

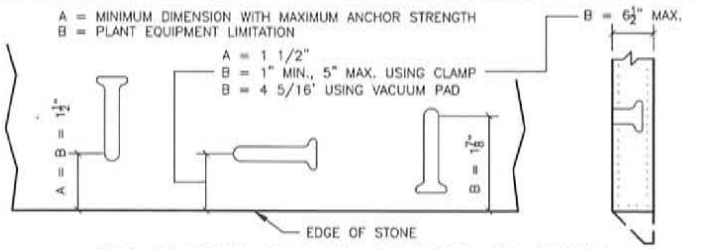

#31 @ BACK OR FACE TO EDGE OF STONE

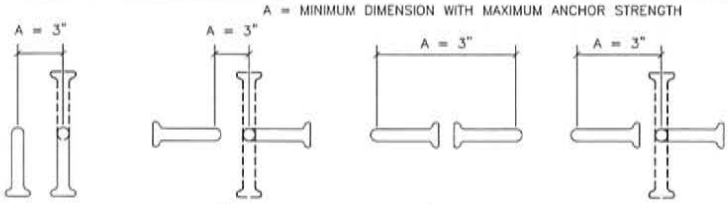

#31 ANCHOR TO #31 ANCHOR

SKETCH #31C

1/4"ø TYPE #31 ANCHOR LOCATION LIMITATIONS

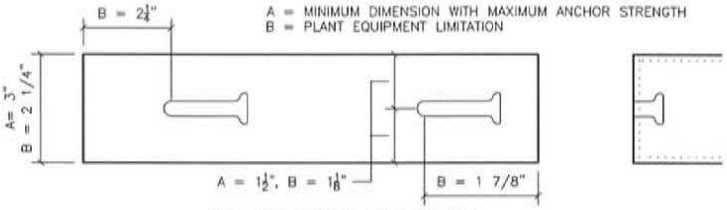

#31 IN EDGE OF STONE

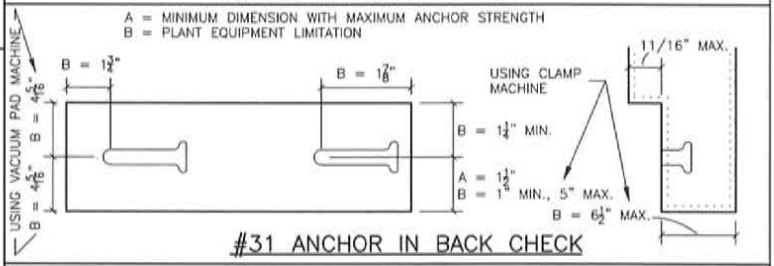

#31 ANCHOR IN BACK CHECK

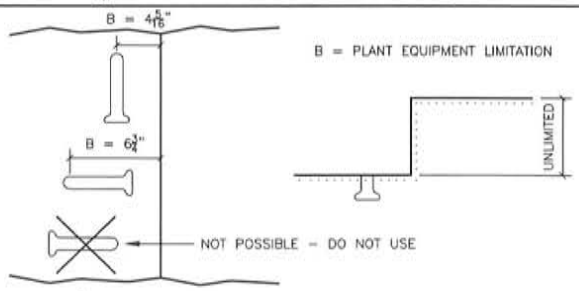

#31 ANCHOR AT INSIDE CORNERS

GRIDWORX®

GRIDWORX ALUMINUM EXTRUSIONS

6005 T5 Extruded Aluminum Extrusions used to anchor cladding panels.

Scope Includes:
Gridworx Continuous Horizontal Rails
Gridworx Mechanical Kerf

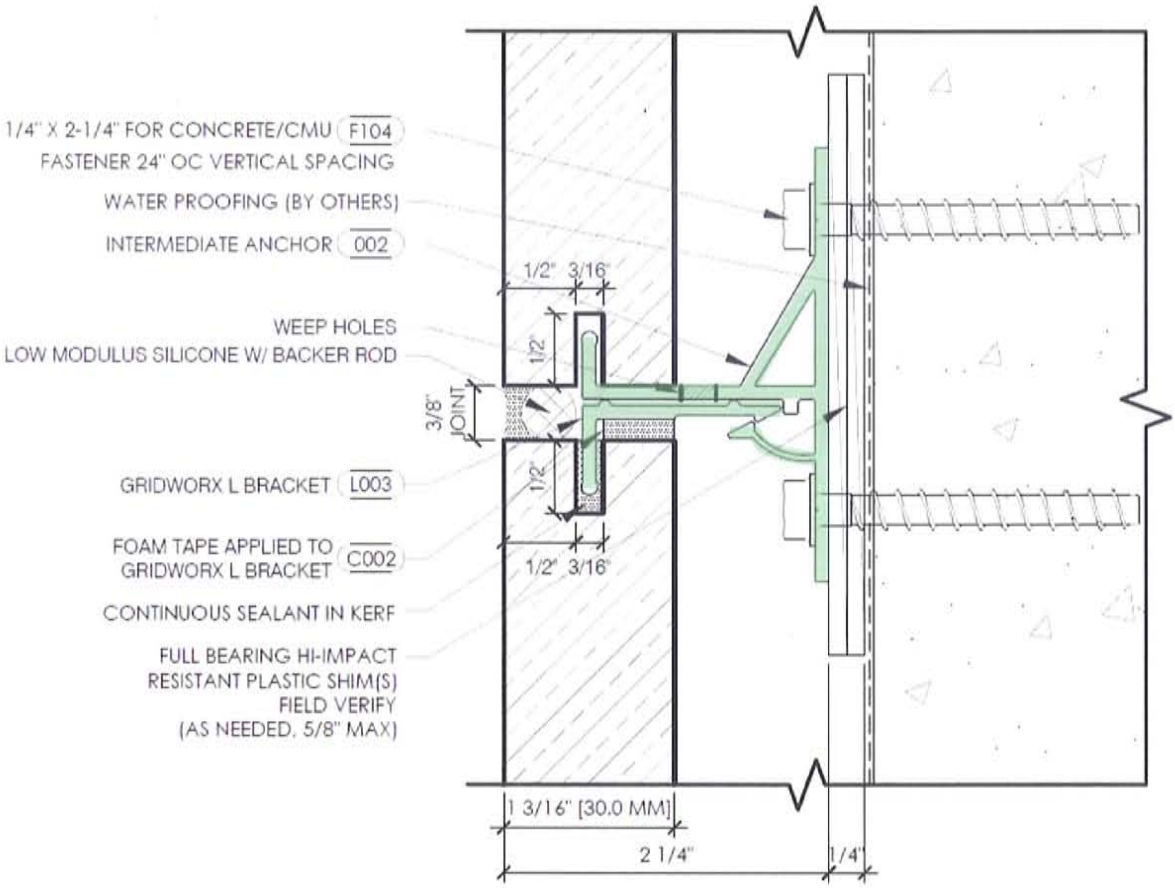

TOWER EXTRUSIONS
PO Box 218
Olney, Texas 76374
Phone (940) 564-5681
Fax (940) 564-5033

PACKING LIST
Job # 300308

10/14/2020 03:26:45 PM

Customer: **GRIDWORX - PRECISION WALL SYS** Ship To:

P.O. #: **1805**

Job #: **300308**

B/L #: _____

Ship Date: **07/29/2020**

Die Number	Customer Part Number	Alloy - Temp	Length (in)	Finish	Ordered Pieces	Ordered Pounds	Bundle Number	This Shipment Pieces	This Shipment Pounds
22829	560 KERF ANCHOR	6005A-T61	144"	Anodize	300	1440	2915284	323	1550
						TOTAL:	*1*	*323*	*1550*
22850	A202 2" ADJUSTABLE	6005A-T61	144"	Anodize	79	601	2915239	89	633
						TOTAL:	*1*	*89*	*633*
22727	002 INTERMEDIATE T	6005A-T61	144"	Anodize	400	3494	2914445	90	702
							2914449	90	702
							2914636	90	702
							2914637	90	702
							2914642	81	632
						TOTAL:	*5*	*441*	*3440*
						SHIPMENT TOTAL:		*853*	*5623*

CERTIFICATE OF ANALYSIS AND MECHANICAL PROPERTIES

CHEMICAL ANALYSIS

Alloy	Temper	SI		FE		CU		MN		MG		CR		ZN		TI	
		Min	Max	Min	Max	Min	Max	Min	Max	Min	Max	Min	Max	Min	Max	Min	Max
6005A	T61	0.50	0.90	0.00	0.35	0.00	0.35	0.00	0.50	0.40	0.70	0.00	0.30	0.00	0.20	0.00	0.10

TENSILE STRENGTH

Ultimate		Yield		Elongati
Min	Max	Min	Max	Min
38.00	-	35.00	0.00	8.00%

THIS IS TO CERTIFY THAT ABOVE MATERIAL IS WITHIN SPECIFIED LIMITS.

TOWER EXTRUSIONS, LTD.
Quality Control Supervisor

a:\rottalshipFAT.frx

TOWEREXTRUSIONS, LTD.

P.O. Box 218
Olney, Texas 76374

CERTIFICATE OF ANALYSIS
MECHANICAL AND CHEMICAL PROPERTIES

Customer: GridWorx - Precesion Wall Systems

Date: 1-Jan-21

Job No.: All

Customer P.O. All

Die No: All

Item	Description	Quantity Shipped		
		Feet		Pieces
1	Aluminum Extrusion	**********		**********

Chemical Analysis (%):

Alloy	Silicon	Iron	Copper	Manganese	Magnesium	Chromium	Zinc	Titanium	Other
	Min. - Max	Max	Max	Max	Min. - Max	Max	Max	Max	
6005A	0.50 - 0.9	0.35	0.30	0.50	0.40 - 0.7	0.30	0.20	0.10	

Alloy	*Tensile Strength:*		
		Min.	Max.
6005A T61	Ultimate-	38,000	-
	Yield-	35,000	-
	Elongation-	8.00%	-

This is to certify that above test results comply with ASTM B221.

TOWEREXTRUSIONS, LTD.

Quality Manager

Phone: (940) 564-5681

Fax: (940) 564-5033

Construction Testing Sciences
2978 Congressman Ln. Dallas, TX 75220
Phone: 214.703.8911
www.ctsciences.com

Report of Extruded Rail Load / Deflection Testing

Client: Gridworx, Ltd.
Project: **Intermediate Anchor 002**
Project No.: 20-00157-900-01

Report No.: 13920-002
Date of Service: 3/30/2020

Construction Testing Sciences (CTS) was retained by Gridworx, Ltd. to perform compression load / deflection testing on a continuous intermediate "T" anchor, identified as Intermediate Anchor 002. This test program consisted of a steel frame with three vertical members at 16" o.c., simulating metal studs. DensGlass sheathing was secured to the frame, followed by installation of the anchor, which measured 34" long. The anchor was secured to the frame with 1/4" Ø self-tapping hex head screws. A rigid steel loading bar, simulating kerfed stone, was placed on the anchor through which to apply a compression load. Dial gauges were installed at each end of the the anchor to measure deflection under load. Initially, load was applied in 25 lbs. increments up to 300 lbf., followed by loading in 50 lbs. increments up to 2100 lbf. Deflection was recorded at each increment throughout the test. A total of five anchors were tested in this manner. Results of these tests are given on the following pages.

We trust the information provided is acceptable for your use. If you have any questions or require additional information please contact us.

Respectfully submitted,

Jack Gary
General Manager

LIMITATIONS: The test results presented herein were prepared based upon the specific samples provided for testing. We assume no responsibility for variation in quality (compositior appearance, performance, etc.) or any other feature of similar subject matter provided by persons or conditions over which we have no control. Our letters and reports are for the exclu use of the clients to whom they are addressed and shall not be reproduced except in full without the written approval of Construction Testing Sciences, LLC.

Construction Testing Sciences
2978 Congressman Ln. Dallas, TX 75220
Phone: 214.703.8911
www.ctsciences.com

Gridworx Extruded Rail Compression Loading **Date of Service: 3/30/2020**

Sample ID: Intermediate Anchor 002 **Report Number: 13920-002**

Sample #: 1

Load (lbs)	Deflection (inches)		
	Gauge 1	Gauge 2	Avg.
25	0.000	0.000	**0.000**
50	0.001	0.000	**0.001**
75	0.002	0.001	**0.002**
100	0.002	0.001	**0.002**
125	0.003	0.002	**0.003**
150	0.003	0.002	**0.003**
175	0.004	0.002	**0.003**
200	0.004	0.003	**0.004**
225	0.005	0.004	**0.005**
250	0.005	0.004	**0.005**
275	0.006	0.005	**0.006**
300	0.006	0.006	**0.006**
350	0.007	0.007	**0.007**
400	0.009	0.009	**0.009**
450	0.011	0.011	**0.011**
500	0.014	0.013	**0.014**
550	0.016	0.015	**0.016**
600	0.019	0.017	**0.018**
650	0.022	0.019	**0.021**
700	0.024	0.022	**0.023**
750	0.027	0.024	**0.026**
800	0.030	0.026	**0.028**
850	0.033	0.028	**0.031**
900	0.036	0.030	**0.033**

Load (lbs)	Deflection (inches)		
	Gauge 1	Gauge 2	Avg.
950	0.039	0.039	**0.039**
1000	0.042	0.043	**0.043**
1050	0.044	0.046	**0.045**
1100	0.049	0.052	**0.051**
1150	0.050	0.053	**0.052**
1200	0.053	0.056	**0.055**
1250	0.056	0.059	**0.058**
1300	0.058	0.064	**0.061**
1350	0.061	0.068	**0.065**
1400	0.063	0.071	**0.067**
1450	0.066	0.074	**0.070**
1500	0.069	0.077	**0.073**
1550	0.072	0.081	**0.077**
1600	0.075	0.084	**0.080**
1650	0.084	0.087	**0.086**
1700	0.086	0.090	**0.088**
1750	0.089	0.094	**0.092**
1800	0.092	0.098	**0.095**
1850	0.095	0.102	**0.099**
1900	0.099	0.106	**0.103**
1950	0.103	0.110	**0.107**
2000	0.106	0.115	**0.111**
2050	0.109	0.119	**0.114**
2100	0.112	0.123	**0.118**

LIMITATIONS: The test results presented herein were prepared based upon the specific samples provided for testing. We assume no responsibility for variation in quality (composition, appearance, performance, etc.) or any other feature of similar subject matter provided by persons or conditions over which we have no control. Our letters and reports are for the exclusive use of the clients to whom they are addressed and shall not be reproduced except in full without the written approval of Construction Testing Sciences, LLC.

Construction Testing Sciences
2978 Congressman Ln. Dallas, TX 75220
Phone: 214.703.8911
www.ctsciences.com

Gridworx Extruded Rail Compression Loading **Date of Service: 3/30/2020**

Sample ID: Intermediate Anchor 002 **Report Number: 13920-002**
Sample #: 2

Load (lbs)	Deflection (inches)		
	Gauge 1	Gauge 2	Avg.
25	0.000	0.000	**0.000**
50	0.001	0.000	**0.001**
75	0.002	0.001	**0.002**
100	0.003	0.001	**0.002**
125	0.003	0.002	**0.003**
150	0.004	0.003	**0.004**
175	0.005	0.004	**0.005**
200	0.006	0.005	**0.006**
225	0.007	0.006	**0.007**
250	0.008	0.008	**0.008**
275	0.010	0.009	**0.010**
300	0.011	0.011	**0.011**
350	0.014	0.014	**0.014**
400	0.017	0.018	**0.018**
450	0.019	0.020	**0.020**
500	0.022	0.023	**0.023**
550	0.025	0.026	**0.026**
600	0.028	0.029	**0.029**
650	0.030	0.033	**0.032**
700	0.033	0.038	**0.036**
750	0.035	0.043	**0.039**
800	0.038	0.047	**0.043**
850	0.041	0.052	**0.047**
900	0.045	0.057	**0.051**

Load (lbs)	Deflection (inches)		
	Gauge 1	Gauge 2	Avg.
950	0.047	0.060	**0.054**
1000	0.048	0.062	**0.055**
1050	0.050	0.065	**0.058**
1100	0.052	0.066	**0.059**
1150	0.054	0.068	**0.061**
1200	0.057	0.072	**0.065**
1250	0.059	0.073	**0.066**
1300	0.060	0.076	**0.068**
1350	0.063	0.079	**0.071**
1400	0.065	0.082	**0.074**
1450	0.068	0.085	**0.077**
1500	0.071	0.088	**0.080**
1550	0.073	0.090	**0.082**
1600	0.075	0.092	**0.084**
1650	0.077	0.095	**0.086**
1700	0.080	0.098	**0.089**
1750	0.084	0.102	**0.093**
1800	0.087	0.104	**0.096**
1850	0.089	0.106	**0.098**
1900	0.091	0.108	**0.100**
1950	0.093	0.111	**0.102**
2000	0.096	0.113	**0.105**
2050	0.097	0.116	**0.107**
2100	0.101	0.119	**0.110**

LIMITATIONS: The test results presented herein were prepared based upon the specific samples provided for testing. We assume no responsibility for variation in quality (composition, appearance, performance, etc.) or any other feature of similar subject matter provided by persons or conditions over which we have no control. Our letters and reports are for the exclusive use of the clients to whom they are addressed and shall not be reproduced except in full without the written approval of Construction Testing Sciences, LLC.

Construction Testing Sciences
2978 Congressman Ln. Dallas, TX 75220
Phone: 214.703.8911
www.ctsciences.com

Gridworx Extruded Rail Compression Loading **Date of Service: 3/30/2020**

Sample ID: Intermediate Anchor 002 **Report Number: 13920-002**
Sample #: 3

Load (lbs)	Deflection (inches)		
	Gauge 1	Gauge 2	Avg.
25	0.000	0.000	**0.000**
50	0.001	0.001	**0.001**
75	0.001	0.001	**0.001**
100	0.002	0.001	**0.002**
125	0.003	0.002	**0.003**
150	0.004	0.003	**0.004**
175	0.005	0.004	**0.005**
200	0.006	0.005	**0.006**
225	0.007	0.006	**0.007**
250	0.008	0.008	**0.008**
275	0.009	0.009	**0.009**
300	0.010	0.011	**0.011**
350	0.012	0.020	**0.016**
400	0.014	0.027	**0.021**
450	0.016	0.034	**0.025**
500	0.019	0.040	**0.030**
550	0.021	0.044	**0.033**
600	0.024	0.048	**0.036**
650	0.026	0.051	**0.039**
700	0.029	0.054	**0.042**
750	0.031	0.058	**0.045**
800	0.034	0.061	**0.048**
850	0.037	0.064	**0.051**
900	0.039	0.067	**0.053**

Load (lbs)	Deflection (inches)		
	Gauge 1	Gauge 2	Avg.
950	0.042	0.070	**0.056**
1000	0.045	0.073	**0.059**
1050	0.047	0.075	**0.061**
1100	0.052	0.079	**0.066**
1150	0.052	0.081	**0.067**
1200	0.055	0.084	**0.070**
1250	0.057	0.086	**0.072**
1300	0.060	0.088	**0.074**
1350	0.063	0.091	**0.077**
1400	0.065	0.094	**0.080**
1450	0.068	0.097	**0.083**
1500	0.071	0.099	**0.085**
1550	0.074	0.102	**0.088**
1600	0.077	0.105	**0.091**
1650	0.081	0.108	**0.095**
1700	0.084	0.110	**0.097**
1750	0.087	0.130	**0.109**
1800	0.090	0.116	**0.103**
1850	0.030	0.118	**0.074**
1900	0.097	0.121	**0.109**
1950	0.100	0.124	**0.112**
2000	0.104	0.127	**0.116**
2050	0.107	0.129	**0.118**
2100	0.111	0.132	**0.122**

LIMITATIONS: The test results presented herein were prepared based upon the specific samples provided for testing. We assume no responsibility for variation in quality (composition, appearance, performance, etc.) or any other feature of similar subject matter provided by persons or conditions over which we have no control. Our letters and reports are for the exclusive use of the clients to whom they are addressed and shall not be reproduced except in full without the written approval of Construction Testing Sciences, LLC.

Construction Testing Sciences
2978 Congressman Ln. Dallas, TX 75220
Phone: 214.703.8911
www.ctsciences.com

Gridworx Extruded Rail Compression Loading **Date of Service: 3/30/2020**

Sample ID: Intermediate Anchor 002 **Report Number: 13920-002**
Sample #: 4

Load (lbs)	Deflection (inches)		
	Gauge 1	Gauge 2	Avg.
25	0.000	0.000	**0.000**
50	0.000	0.001	**0.001**
75	0.000	0.002	**0.001**
100	0.001	0.002	**0.002**
125	0.002	0.004	**0.003**
150	0.004	0.006	**0.005**
175	0.005	0.008	**0.007**
200	0.006	0.010	**0.008**
225	0.008	0.012	**0.010**
250	0.009	0.013	**0.011**
275	0.011	0.015	**0.013**
300	0.012	0.017	**0.015**
350	0.016	0.023	**0.020**
400	0.018	0.028	**0.023**
450	0.021	0.032	**0.027**
500	0.024	0.037	**0.031**
550	0.027	0.041	**0.034**
600	0.030	0.046	**0.038**
650	0.033	0.051	**0.042**
700	0.035	0.056	**0.046**
750	0.038	0.059	**0.049**
800	0.040	0.063	**0.052**
850	0.043	0.067	**0.055**
900	0.045	0.070	**0.058**

Load (lbs)	Deflection (inches)		
	Gauge 1	Gauge 2	Avg.
950	0.048	0.074	**0.061**
1000	0.050	0.078	**0.064**
1050	0.052	0.081	**0.067**
1100	0.056	0.087	**0.072**
1150	0.057	0.088	**0.073**
1200	0.060	0.091	**0.076**
1250	0.062	0.094	**0.078**
1300	0.064	0.098	**0.081**
1350	0.067	0.100	**0.084**
1400	0.069	0.104	**0.087**
1450	0.072	0.107	**0.090**
1500	0.075	0.109	**0.092**
1550	0.077	0.113	**0.095**
1600	0.080	0.116	**0.098**
1650	0.083	0.110	**0.097**
1700	0.085	0.121	**0.103**
1750	0.088	0.124	**0.106**
1800	0.091	0.128	**0.110**
1850	0.094	0.131	**0.113**
1900	0.097	0.134	**0.116**
1950	0.100	0.137	**0.119**
2000	0.103	0.141	**0.122**
2050	0.106	0.144	**0.125**
2100	0.109	0.148	**0.129**

LIMITATIONS: The test results presented herein were prepared based upon the specific samples provided for testing. We assume no responsibility for variation in quality (composition, appearance, performance, etc.) or any other feature of similar subject matter provided by persons or conditions over which we have no control. Our letters and reports are for the exclusive use of the clients to whom they are addressed and shall not be reproduced except in full without the written approval of Construction Testing Sciences, LLC.

Construction Testing Sciences
2978 Congressman Ln. Dallas, TX 75220
Phone: 214.703.8911
www.ctsciences.com

Gridworx Extruded Rail Compression Loading

Date of Service: 3/30/2020

Sample ID: Intermediate Anchor 002

Report Number: 13920-002

Sample #: 5

Load (lbs)	Deflection (inches)		
	Gauge 1	Gauge 2	Avg.
25	0.001	0.000	**0.001**
50	0.001	0.001	**0.001**
75	0.002	0.001	**0.002**
100	0.003	0.002	**0.003**
125	0.004	0.000	**0.002**
150	0.006	0.003	**0.005**
175	0.008	0.005	**0.007**
200	0.010	0.006	**0.008**
225	0.012	0.007	**0.010**
250	0.014	0.009	**0.012**
275	0.017	0.012	**0.015**
300	0.019	0.017	**0.018**
350	0.025	0.026	**0.026**
400	0.029	0.033	**0.031**
450	0.035	0.400	**0.218**
500	0.041	0.046	**0.044**
550	0.045	0.051	**0.048**
600	0.050	0.056	**0.053**
650	0.055	0.061	**0.058**
700	0.061	0.067	**0.064**
750	0.069	0.073	**0.071**
800	0.074	0.078	**0.076**
850	0.078	0.082	**0.080**
900	0.082	0.086	**0.084**

Load (lbs)	Deflection (inches)		
	Gauge 1	Gauge 2	Avg.
950	0.085	0.090	**0.088**
1000	0.089	0.094	**0.092**
1050	0.092	0.097	**0.095**
1100	0.098	0.102	**0.100**
1150	0.099	0.104	**0.102**
1200	0.101	0.108	**0.105**
1250	0.104	0.111	**0.108**
1300	0.107	0.115	**0.111**
1350	0.110	0.118	**0.114**
1400	0.112	0.122	**0.117**
1450	0.115	0.125	**0.120**
1500	0.118	0.129	**0.124**
1550	0.121	0.133	**0.127**
1600	0.124	0.136	**0.130**
1650	0.127	0.140	**0.134**
1700	0.130	0.144	**0.137**
1750	0.133	0.148	**0.141**
1800	0.136	0.153	**0.145**
1850	0.139	0.157	**0.148**
1900	0.142	0.163	**0.153**
1950	0.145	0.166	**0.156**
2000	0.148	0.170	**0.159**
2050	0.152	0.174	**0.163**
2100	0.155	0.177	**0.166**

LIMITATIONS: The test results presented herein were prepared based upon the specific samples provided for testing. We assume no responsibility for variation in quality (composition, appearance, performance, etc.) or any other feature of similar subject matter provided by persons or conditions over which we have no control. Our letters and reports are for the exclusive use of the clients to whom they are addressed and shall not be reproduced except in full without the written approval of Construction Testing Sciences, LLC.

A2LA - 603.01 Mechanical Testing

AADFW, INC.

ISO 17025
ACCREDITED
(817) 540-0153 • FAX (817) 540-0886 • 2161 Regal Parkway • Euless, TX 76040-6733

Salt Spray Test Certificate

Stephen Loyd
Precision Wall Systems, Inc.
1821 Levee Street
Dallas, TX 75207

PH: (214) 774-4502 FX: (214) 432-5963

Date Issued : 06/17/2010
Lab Number : L10081683
PO Number : 7087
Location of Test: AADFW Lab
Date Tested : 06/17/2010
File Number : 0001923-00
Revision Date :
Rev: 00

*Red corrosion was noted on the stone samples. More on the natural stone than the Arriscraft. This corrosion appeared in the first 24 Hours and did not grow. The only effect it had on the aluminum was staining.

Exposure Time: 1008 hours **Photograph(s):** N/A

Process Specification(s):
Spec: N/A, Report Only

Test Method	Rev
ASTM B 117	-09

Equipment:
Singleton - SN: SCCH22-8528

Support Method: Plastic Rack
Cleaning Method: Running Water

Part #: N/S Description: Samples

Results: (Military Time)

Sample	[Date In	Time In]	[Date Out/Time Out]		Results	Status
1-3 No Blocks	05/06/2010	09:00	06/17/2010	09:00	No Corrosion on significant areas	N/A
1-3 Natural Limes	05/06/2010	09:00	06/17/2010	09:00	No Corrosion on significant areas	N/A
1-3 Arriscraft cals	05/06/2010	09:00	06/17/2010	09:00	No Corrosion on significant areas*	N/A

Disposition: For Review Only, based only on the test data reported above. I certify that these are accurate and true results of the indicated tests performed in accordance with the AADFW QA Manual and AADFW test Procedures. A2LA Accreditation Certificate #603.01 in the Mechanical Field of Testing.

AADFW, Inc. Jeremy Wilson, B.S., E.I. T., Metallurgist

Test specimens and/or unused sample material will be retained for 6 months from date of report, except by prior written agreement. Our letters and reports apply to the sample tested and/or inspected and are not necessarily indicative of the qualities of apparently identical or similar products. All measurements, testing, and opinions are subject to change upon receipt of additional information, testing, or measurements. Reproduction except in full is reserved pending written approval. The recording of false, fictitious, or fraudulent statements or entries on this certificate may be punishable as a felony under Federal Law. Texas Registered Engineering Firm F-734.

AADFW, INC. ISO 17025 ACCREDITED (817) 540-0153 • FAX (817) 540-0886 • 2161 Regal Parkway • Euless, TX 76040-6733

Tensile Test Certificate

ASTM B 557--06 Rounded Per ASTM E 29-08

Stephen Loyd
Precision Wall Systems, Inc.
1821 Levee Street
Dallas, TX 75207

PH: (214) 774-4502 FX: (214) 432-5963

Date Issued : 06/21/2010
Lab Number : L10082803
PO Number : VERBAL/S.LOYD
Location of Test: AADFW Lab
Date Tested : 06/21/2010
File Number : 0021682-00
Revision Date : **Rev:** 00

Part #: ID: #1, #2, #3
Samples: 3

Size: 1" gage length

Equipment	Method	REV
Tensile: UTTester SFM-150KN, SN:0408535	ASTM B 557	-06

Bar Type: Flat **Yield Criterion:** 0.2 % Offset **Gage Length:** 1.0 "
Specification: N/A
Material:

	------ Dimensions (in) ------			---- Ultimate ----		-------Yield -------		Elong	R. A.	Hard.
Sample Req:	Width	Thick.		(lbs)	(ksi)	(lbs)	(ksi)	(pct)	(pct)	
1	0.249	0.088		814	37.1	678	30.9	16		
2	0.248	0.087		813	37.7	687	31.8	16		
3	0.249	0.085		748	35.3	615	29.1	16		

Disposition: For Review Only, based only on test data reported above. Nadcap requirement: Strain Rate prior to yield is .003 - .007 in/in/min; strain rate after yield is approximately .125 in/in/min. I certify that these are accurate and true results of the indicated tests performed in accordance with the AADFW applicable test procedures and relate only to the samples tested. AADFW is accredited by A2LA, Mechanical field of testing, Cert # 603.01.

AADFW, Inc. Jeremy Wilson, B.S., E.I. T., Metallurgist

Test specimens and/or unused sample material will be retained for 6 months from date of report, except by prior written agreement. Our letters and reports apply to the sample tested and/or inspected and are not necessarily indicative of the qualities of apparently identical or similar products. All measurements, testing, and opinions are subject to change upon receipt of additional information, testing, or measurements. Reproduction except in full is reserved pending written approval. The recording of [illegible] Federal Law. Texas Registered Engineering Firm F-734

AADFW, INC. ISO 17025 ACCREDITED (817) 540-0153 • FAX (817) 540-0886 • 2161 Regal Parkway • Euless, TX 76040-6733

Tensile Test Certificate

ASTM B 557--06 Rounded Per ASTM E 29-08

Stephen Loyd
Precision Wall Systems, Inc.
1821 Levee Street
Dallas, TX 75207

PH: (214) 774-4502 FX: (214) 432-5963

Date Issued : 06/21/2010
Lab Number : L10082803
PO Number : VERBAL/S.LOYD
Location of Test: AADFW Lab
Date Tested : 06/21/2010
File Number : 0021683-00
Revision Date : **Rev:** 00

Part #: N/S
Samples: 1

Size: 1" gage length

Equipment	Method	REV
Tensile: UTTester SFM-150KN, SN:0408535	ASTM B 557	-06

Bar Type: Flat **Yield Criterion:** 0.2 % Offset **Gage Length:** 1.0 "
Specification: N/A
Material:

	------ Dimensions (in) ------			---- Ultimate ----		-------Yield -------		Elong	R. A.	Hard.
Sample Req:	Width	Thick.		(lbs)	(ksi)	(lbs)	(ksi)	(pct)	(pct)	
4	0.251	0.087		865	39.6	724	33.2	15		

Disposition: For Review Only, based only on test data reported above. Nadcap requirement: Strain Rate prior to yield is .003 - .007 in/in/min; strain rate after yield is approximately .125 in/in/min. I certify that these are accurate and true results of the indicated tests performed in accordance with the AADFW applicable test procedures and relate only to the samples tested. AADFW is accredited by A2LA, Mechanical field of testing, Cert # 603.01.

AADFW, Inc. Jeremy Wilson, B.S., E.I. T., Metallurgist

Test specimens and/or unused sample material will be retained for 6 months from date of report, except by prior written agreement. Our letters and reports apply to the sample tested and/or inspected and are not necessarily indicative of the qualities of apparently identical or similar products. All measurements, testing, and opinions are subject to change upon receipt of additional information, testing, or measurements. Reproduction except in full is reserved pending written approval. The recording of false, fictitious, or fraudulent statements or entries on this certificate may be punishable as a felony under Federal Law. Texas Registered Engineering Firm F-734.

SIMPSON GUMPERTZ & HEGER
Engineering of Structures
and Building Enclosures

15 February 2011

Mr. Stephen Loyd
Precision Wall Systems, Inc.
1821 Levee Street
Dallas, TX 75207

Project 100931 – Corrosion Evaluation of the Gridworx Mechanical Stone Hanging System

Dear Mr. Loyd:

At your request, we reviewed the product samples, salt-spray test results, tensile strength test results, product chemistry and processing information of the Gridworx mechanical stone hanging system that you provided. This report summarizes our findings.

1. BACKGROUND

The Gridworx mechanical stone hanging system is designed as a field-installed, pre-engineered, hand set stone veneer cladding system. We understand that cementitious grout is not used between the stone panels and that the Gridworx supports are not exposed to pH conditions outside the range of 3-10. Gridworx uses 12 ft long aluminum support channels that are mechanically affixed to the structure with fasteners. The stone panels are delivered with kerf cuts on the horizontal edges. They are set in the J portion of the Gridworx channel: this carries the dead load of the panel. "L Brackets" are placed in the top kerf and rotated inward so the pointed end snaps into a receptacle in the channel above. These provide lateral wind load support.

Gridworx channels are produced from aluminum Alloys 6005 and 6005A with a T-5 temper. Although unprotected aluminum is inherently corrosion resistant through natural oxidation and the formation of a protective oxide film, Gridworx channels offer additional protection with the application of an anodized treatment meeting the specifications of AA M12C22A21 in accordance with AAMA 611-98. The channels are affixed to a steel stud substrate with a special-use fastener possessing a dual temper and a Stalgard coating. Bi-metal stainless steel fasteners are used to attach the aluminum channels to backup systems consisting of concrete masonry units (CMU) or cast-in-place concrete.

2. DOCUMENT REVIEW

You provided two mill certificates showing chemical analysis for the aluminum billets used to extrude the Gridworx support channels. The certificates confirm that both Alloys 6005 and 6005A are used to manufacture the product. The main difference in the requirements between these two alloys is that Alloy 6005A allows for a greater copper and manganese content.

You provided reports for salt spray tests of the Gridworx channels. The salt spray procedure is designed to accelerate the corrosive attack on the subject material in order to predict its corrosion resistance in high-chloride environments. It is often referred to as an accelerated weathering procedure. AADFW, Inc. conducted the salt spray testing for 1,008 hrs on the Gridworx channels holding natural limestone, holding Arriscraft International's calcium silicate units, and holding no stone at all. The testing procedures are standardized under national and international standards as ASTM B117, Standard Practice for Operating Salt Spray (Fog) Apparatus and ISO 9227, Corrosion

SIMPSON GUMPERTZ & HEGER INC.
41 Seyon Street, Building 1, Suite 500
Waltham, Massachusetts 02453
main 781.907.9000 fax 781.907.9009
www.sgh.com

Boston
Los Angeles
New York
San Francisco
Washington, DC

Tests in Artificial Atmospheres – Salt Spray Tests. The tests included nine channels total (three of each). All channels had raw cut edges, punched weep holes and screw slots. This conforms to normal field conditions; the cut edges and weep holes were not anodized.

You provided tensile strength test reports for the Gridworx channels used in the three salt spray test conditions (above) as well as with a control sample that had not been through the salt spray test. These tests were conducted in accordance with the standards set by ASTM B557-06, Standard Test Methods for Tension Testing Wrought and Cast Aluminum- and Magnesium-Alloy Products.

The product literature for the recommend fasteners that you provided describe a 300 series stainless steel with 400 series hardened self-drilling tips and dual tempered fasteners with a Stalgard coating.

3. LABORATORY ANALYSIS

Laboratory Testing, Inc. performed a chemical analysis of a stone support channel using direct-reading atom emissions spectroscopy. This analyzed section came from the no-stone salt-spray specimen. The results of this chemical analysis show that the alloy conforms to the specification for Alloy 6005A as per ASTM B221, Standard Specification for Aluminum and Aluminum-Alloy Extruded Bars, Rods, Wire, Profiles, and Tubes.

We used a stereo optical microscope to examine the salt spray channels. We did not see any pitting or material loss as a result of the salt-spray testing, however, the surface of the aluminum was stained by particles on the stone samples.

4. DISCUSSION

The aluminum alloys currently used for the Gridworx mechanical stone supports are 6005 and 6005A, both with a T-5 temper. Manganese is not a critical alloying element in this material from a corrosion standpoint; therefore, the manganese content in either alloy should not affect the corrosion performance of this product. Large amounts of copper, however, can increase the potential for corrosion in series 6000 aluminum alloys, so the copper content of Alloy 6005A must be kept lower than 0.1%, which is the upper limit of Alloy 6005.

Aluminum alloys perform well in coastal locations with high salt content because they are more resistant to the chlorides that cause pitting corrosion than other alternative materials, such as carbon steel and stainless steel. The Gridworx support channels performed well after 1,008 hrs of salt-spray testing and did not show signs of pitting corrosion or other harmful effects of the chloride exposure. This evaluation includes the cut edges, weep holes, and screw slots where the anodized treatment had been removed.

Aluminum Alloys 6005 and 6005A are lighter and more compliant than hot worked stainless steel; however, these materials have similar yield strengths. The tensile test results on the Gridworx aluminum samples showed yield strengths ranging from 29.1 to 33.2 ksi, with an average yield strength of 31.25 ksi. The average yield strength of the Gridworx aluminum samples tested in tension is comparable to the minimum yield strength (30 ksi) of hot worked stainless steel extruded shapes and tubes given by ASTM A276 – Standard Specification for Stainless Steel Bars and Shapes. The yield strength of a material signifies the onset of permanent deformation in the material; therefore, design codes limit the allowable stresses in these materials to a percentage below their yield strength so that the materials will not exceed their elastic limits during their service life. For typical stone hanging systems, the yield strength of the material is the critical design

parameter and the aluminum alloys of the Gridworx system compare favorably with the yield strength of stainless steel.

The dual tempered fasteners with the Staigard coating and the bi-metal fasteners recommended with the Gridworx system are appropriate selections to provide resistance to hydrogen embrittlement and to minimize galvanic corrosion occurring when dissimilar metals come into contact with the 300 series stainless steel.

5. CONCLUSIONS

Our findings regarding the review of the Gridworx mechanical stone hanging system are summarized as follows:

- The Gridworx stone hanging system utilizes aluminum Alloys 6005 and 6005A with less than 0.1% copper by weight.
- These aluminum alloys exhibit excellent corrosion resistance even in the accelerated environment imposed by the salt-spray tests.
- Aluminum Alloys 6005 and 6005A have a yield strength that is comparable to that of hot-worked stainless steel, Grades 304 and 316.
- The metallurgy of the fasteners specified for installation of the Gridworx supports is appropriate to minimize the potential for galvanic corrosion and hydrogen embrittlement.
- The Gridworx aluminum stone hanging system provides strength and corrosion-resistant characteristics that make it an attractive alternative to stainless steel stone hanging systems in a variety of applications.

In the preparation of this report, we reviewed samples of an aluminum material used in the manufacture of the Gridworx stone hanging system for a generic exterior condition. Due to the many variables associated with the use of any building product, including but not limited to, climatic conditions, design, and product application, any specification and/or use of the Gridworx stone hanging system should be evaluated by a licensed design professional on a project-by-project basis. Simpson Gumpertz & Heger disclaims responsibility for any and all claims arising out of the specification and/or use of the Gridworx stone hanging system alleged to have occurred based on reliance on the opinions expressed herein without such independent evaluation.

Sincerely yours,

Simon C. Bellemare, P.E.
Senior Staff II – Materials
TX License No. 106753

John H. Thomsen
Associate Principal

Texas Registered Firm F-5107
I:\BOS\Projects\2010\100931 00-WORX\WP\004SCBellemare-L 100931 00 esb.doc

STATE OF TEXAS
SIMON C. BELLEMARE
106753
LICENSED
PROFESSIONAL ENGINEER

GRIDWORX®

GRIDWORX CONCRETE FASTENERS

Used to fasten continuous horizontal rails to concrete substrate.

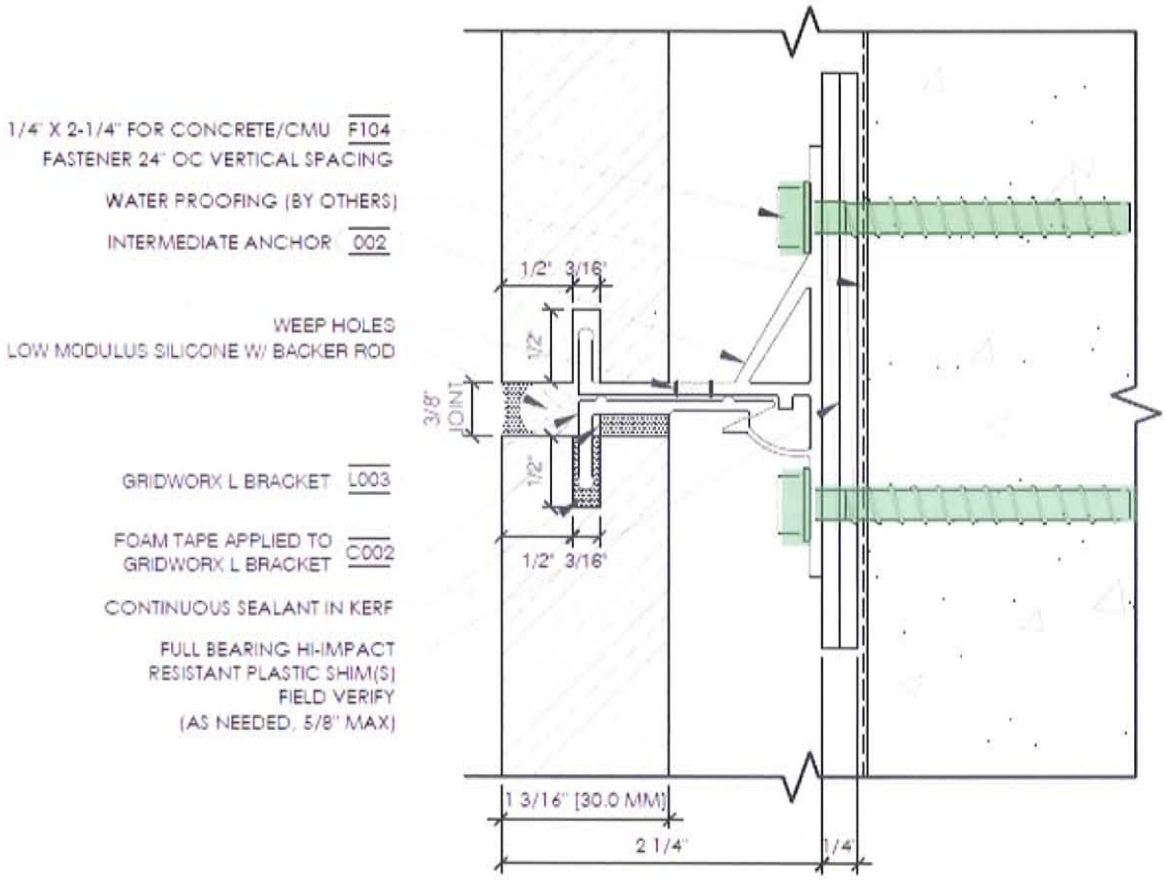

Aggre-Gator®
300 Series Stainless Steel
Threaded Concrete Anchors

ELCO®

Aggre-Gator® Bi-Metal Fasteners: The corrosion resistance of 300 series stainless steel in a threaded concrete anchor

Owners, architects and, design engineers expect longer life cycles from buildings. Extended warranties and use of more sustainable materials add up to greater expectations for performance – from structural integrity to the purely aesthetic – of all building components.

The Solution:
Aggre-Gator Bi-Metal Threaded Concrete Anchors

- Made of 300 series (18-8) stainless steel alloy to provide unmatched corrosion resistance in your toughest applications
- Fused and hardened steel tapping threads make installations easy and hold tight in block and poured concrete
- Coated with silver-colored Stalgard® GB, a Galvanic Barrier to protect aluminum components from accelerated corrosion when in contact with 300 series stainless steel
- Gimlet point provides quick starts, and makes Aggre-Gator anchors an ideal choice for treated, wood-to-wood applications

Applications

- Exposed anchoring/coastal/wet areas
- Aluminum enclosures
- Hurricane shutters/windows/awnings/thresholds
- Curtain wall & window wall support anchors
- Stone facade support anchors
- ACQ-treated wood

You won't find a better, easier-to-install or more reliable 300 series stainless steel anchor for your toughest construction applications than Aggre-Gator bi-metal concrete anchors.

Features

- Bi-metal technology – 300 (18-8) stainless steel head and shank
- Fused and hardened steel tapping threads and gimlet point
- Alternating, hi-low notched thread profile
- Silver-colored Stalgard GB coating

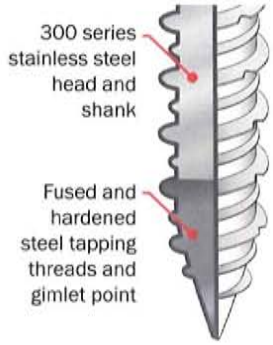

- Hex washer head and TrimFit® flat head designs

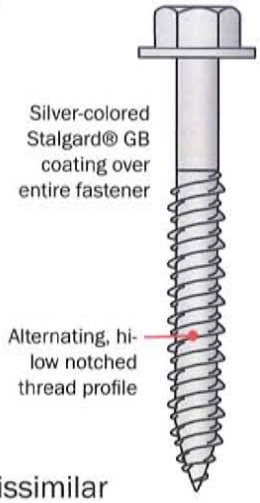

Benefits

- Outstanding corrosion resistance
- Long service life
- High strength and ductility
- Offers greater galvanic compatibility in dissimilar metal applications involving aluminum
- Thread profile provides quick cutting and stability during installations
- High in-place value over life of structures

Selection Guide

	Dia.	L Length	Length Code†	Drive System	Head Style	Drill Bit Size* (Carbide)	S 300 Series (18-8) Stainless Steel Length	ECP Catalog Number*	Pieces Per Box	Pieces Per ¼ Keg
Hex Washer Head										
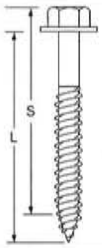	1/4"	1-3/4"	A	5/16" hex	hex washer	3/16" X 3-1/2"	1-1/4"	EML315	50	2000
		2-1/4"	B			3/16" X 4-1/2"	1-3/4"	EML325	50	1500
		2-3/4"	C			3/16" X 4-1/2"	2-1/4"	EML335	50	1000
		3-1/4"	D			3/16" X 5-1/2"	2-3/4"	EML345	50	1000
		4"	F			3/16" X 5-1/2"	3-1/2"	EML365	50	500
TrimFit® Flat Head Fasteners										
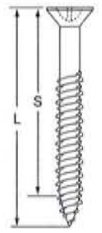	1/4"	1-3/4"	A	#3 phillips	TrimFit® flat head	3/16" X 3-1/2"	1-1/4"	EMM310	50	2500
		2-1/4"	B			3/16" X 4-1/2"	1-3/4"	EMM320	50	1500
		2-3/4"	C			3/16" X 4-1/2"	2-1/4"	EMM330	50	1000
		3-1/4"	D			3/16" X 5-1/2"	2-3/4"	EMM340	50	1000
		4"	F			3/16" X 5-1/2"	3-1/2"	EMM360	50	500

† Length code is marked on top of fastener head (see Identification section).

Identification

The head markings consists of the number "3", the length code, and the Elco® logo as shown to the right.

TrimFit® head

hex washer head

The Ideal Solution

- Unmatched, multi-level corrosion resistance
- Quick and easy installs into concrete or masonry
- Perfect choice for exposed/wet areas/aggressive environments, such as coastal areas
- High performance for your most critical applications

Aggre-Gator
300 Series Stainless Steel
Threaded Concrete Anchors

ELCO

Miami-Dade County Product Control Approved-NOA No. 08-0813.06
High Velocity Hurricane Zone

Performance Data

Substrate: 2220 psi Concrete

Anchor Dia.	Min. Edge Dist.	Min. Spacing	Min. Embedment	Allowable Tension (lbs)
1/4"	1.25"	3.0"	1.000"	118
	2.50"	1.5"	1.000"	195
	1.25"	3.0"	1.375"	289
	2.50"	1.5"	1.375"	343
	1.25"	3.0"	1.750"	517
	2.50"	1.5"	1.750"	465
Anchor Dia.	**Min. Edge Dist.**	**Min. Spacing**	**Min. Embedment**	**Allowable Shear (lbs)**
1/4"	1.50"	3.0"	1.000"	204
	3.00"	1.5"	1.000"	259
	1.50"	3.0"	1.375"	259
	3.00"	1.5"	1.375"	413
	1.50"	3.0"	1.750"	318
	3.00"	1.5"	1.750"	488

Substrate: 3275 PSI Concrete

Anchor Dia.	Min. Edge Dist.	Min. Spacing	Min. Embedment	Allowable Tension (lbs)
1/4"	1.25"	3.0"	1.000"	248
	2.50"	1.5"	1.000"	263
	1.25"	3.0"	1.375"	389
	2.50"	1.5"	1.375"	251
	1.25"	3.0"	1.750"	295
	2.50"	1.5"	1.750"	319
Anchor Dia.	**Min. Edge Dist.**	**Min. Spacing**	**Min. Embedment**	**Allowable Shear (lbs)**
1/4"	1.50"	3.0"	1.000"	255
	3.00"	1.5"	1.000"	226
	1.50"	3.0"	1.375"	319
	3.00"	1.5"	1.375"	511
	1.50"	3.0"	1.750"	306
	3.00"	1.5"	1.750"	515

Substrate: 1x4 (3/4" Thick) Treated No. 2 SYP attached to 2220 psi Concrete

Anchor Dia.	Min. Edge Dist.	Min. Spacing	Min. Embedment	Allowable Shear (lbs)
1/4"	2.50"	3.0"	1.5"	200

Substrate: 2x4 (1-1/2" Thick) Treated No. 2 SYP attached to 2220 psi Concrete

Anchor Dia.	Min. Edge Dist.	Min. Spacing	Min. Embedment	Allowable Shear (lbs)
1/4"	2.50"	3.0"	1.75"	199

Substrate: Concrete Masonry Hollow Block

Anchor Dia.	Min. Edge Dist.	Min. Spacing	Min. Embedment	Allowable Tension (lbs)
1/4"	2.00"	3.0"	1.250"	195
	4.00"	3.0"	1.250"	221
Anchor Dia.	**Min. Edge Dist.**	**Min. Spacing**	**Min. Embedment**	**Allowable Shear (lbs)**
1/4"	2.00"	3.0"	1.250"	234
	4.00"	3.0"	1.250"	264

Substrate: Grout-Filled Concrete Block

Anchor Dia.	Min. Edge Dist.	Min. Spacing	Min. Embedment	Allowable Tension (lbs)
1/4"	2.00"	3.0"	1.250"	208
	4.00"	1.5"	1.250"	186
	2.00"	3.0"	2.00"	407
	4.00"	1.5"	2.00"	504
Anchor Dia.	**Min. Edge Dist.**	**Min. Spacing**	**Min. Embedment**	**Allowable Shear (lbs)**
1/4"	2.00"	3.0"	1.250"	259
	4.00"	1.5"	1.250"	352
	2.00"	3.0"	2.00"	591
	4.00"	1.5"	2.00"	597

NOTES

1. Edge distances denoted herein shall be measured from the center of the anchor to the edge of the substrate in the direction of, as well as perpendicular to, the direction of the load. Spacing between anchors denoted herein shall be measured center-to-center of anchors.
2. Allowable loads suggested herein are only valid when both the minimum anchor center-to-center spacing and the minimum edge distances are complied with.
3. Allowable loads suggested herein equal 25% of the average ultimate laboratory test values obtained during testing performed as part of the requirements to obtain this NOA. Final determination of the appropriate working/design loads to be used in a specific project are the sole responsibility of the engineer of record or of the architect of record specifying the use of the product.
4. No increase in allowable stress has been incorporated into the values provided in the tables contained herein.
5. Anchors approved under this product approval document have not been tested for use under combined loading.
6. The concrete substrate into which these anchors will be attached shall conform to ACI 301 specifications with strength properties as specified herein.
7. The hollow and grout-filled concrete block substrate into which these anchors will be attached shall be medium weight or normal weight concrete block conforming to ASTM C-90.
8. Combination wood and concrete substrate shall consist of 1 x 4 nominal (3/4" thick) treated No. 2 Southern Yellow Pine attached to concrete substrate conforming to ACI 301 specifications with strength properties as specified herein, or 2 x 4 nominal (1-1/2" thick) treated No. 2 Southern Yellow Pine attached to concrete substrate conforming to ACI 301 specifications with strength properties as specified herein.

Due to a wide variety of application conditions or intervening factors not under our control, we assume no liability for the use of the information provided in this document. For additional product information and technical assistance, please contact Elco directly at 1-800-435-7213.

Aggre-Gator
300 Series Stainless Steel
Threaded Concrete Anchors

For more information, contact Elco Construction Products or your distributor.

Elco Construction Products
1304 Kerr Drive • Decorah, IA 52101
Phone: 1.800.435.7213 (USA & Canada)
Fax: 563-387-3540
www.elcoconstruction.com

Distributed By:

Infastech™
Our Technology, Your Success

Avdel® iForm™

Elco®, Aggre-Gator®, Stalgard®, TrimFit®, iForm™ and Infastech™ are trademarks of Infastech Intellectual Properties Pte Ltd.
Avdel® is a registered trademark of Avdel UK Ltd.
©2011 Infastech Intellectual Properties Pte Ltd. All rights reserved.

Rev.03/11