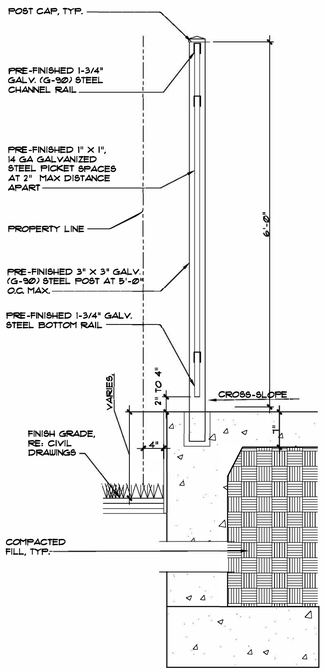

1 A104 PICKET FENCE DETAIL AT RETAINING WALL

SCALE: 1"=1'-0"

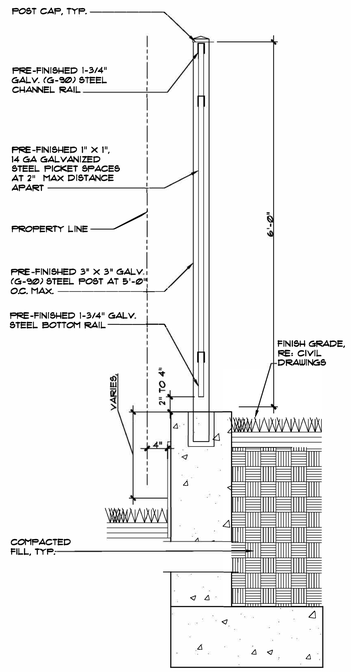

1 A104 PICKET FENCE DETAIL AT RETAINING WALL

SCALE: 1"=1'-0"

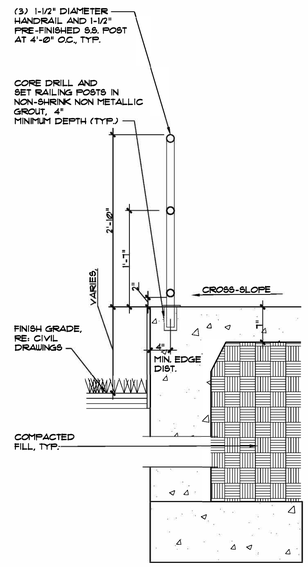

2 A104 RAILING DETAIL AT RETAINING WALL

SCALE: 1"=1'-0"

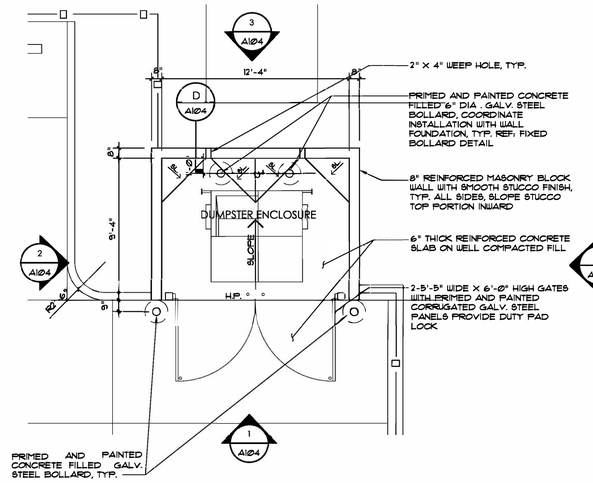

C A104 DUMPSTER ENCLOSURE

SCALE: 1/4"=1'-0"

NOTE(S):

1. PROVIDE BROOM SWEPT FINISH PERPENDICULAR TO WALKWAY
2. GATES SHALL BE EQUIPPED WITH DROP BOLTS, HEAVY DUTY HINGES AND LATCHES (WITH PADLOCK). DRILL HOLES 2" DEEP IN CONCRETE PAVEMENT ALLOW DROP BOLTS TO HOLD IN CLOSED POSITION AND AT OPEN POSITION (90).
3. CONTRACTOR SHALL FIELD VERIFY MASONRY OPENING PRIOR TO MANUFACTURING GATES.
4. SUBMIT GATE SHOP DRAWINGS FOR ARCHITECT'S AND OWNER'S REVIEW.
5. PROVIDE HOSE BIBB AT DUMPSTER ENCLOSURE. REF: PLUMBING DWGS.

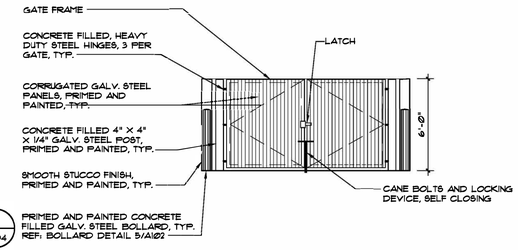

1 A104 FRONT ELEVATION

SCALE: 1/4"=1'-0"

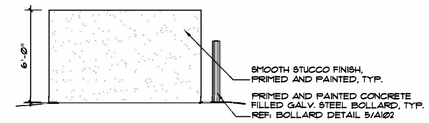

2 A104 SIDE ELEVATION

SCALE: 1/4"=1'-0"

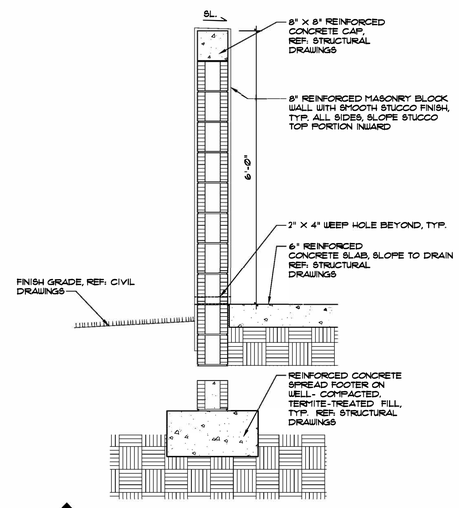

D A104 WALL SECTION

SCALE: 3/4"=1'-0"

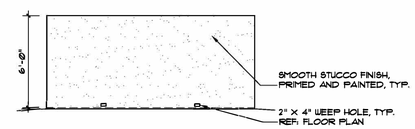

3 A104 REAR ELEVATION

SCALE: 1/4"=1'-0"

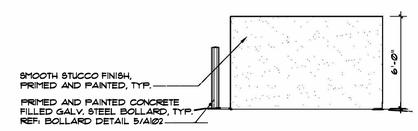

4 A104 SIDE ELEVATION

SCALE: 1/4"=1'-0"

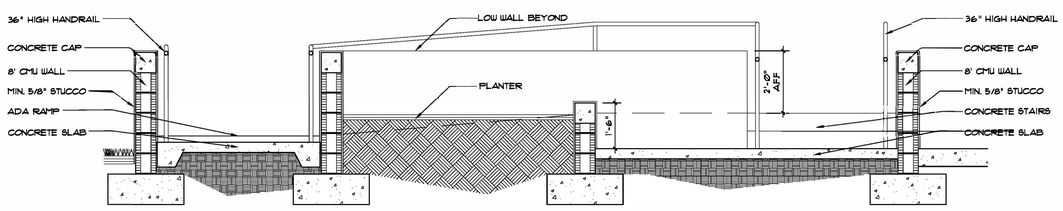

A A104 SECTION

SCALE: 1/2"=1'-0"

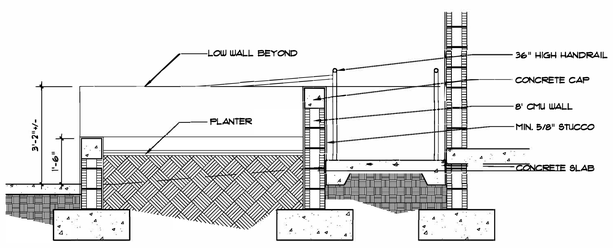

B A104 SECTION

SCALE: 1/2"=1'-0"

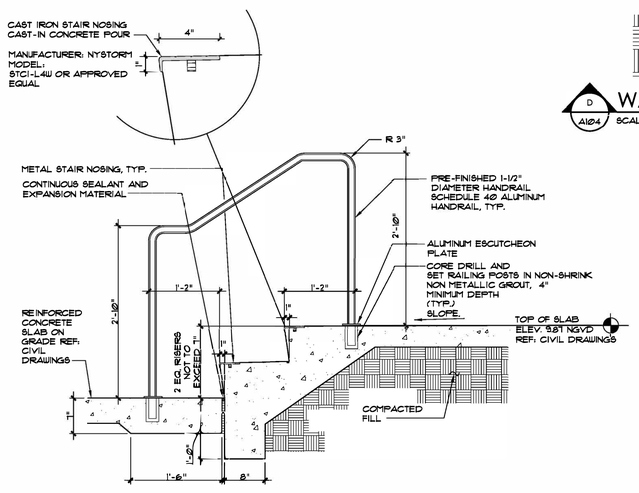

3 A104 STAIR/ HANDRAIL DETAIL

SCALE: 1"=1'-0"

GENERAL RAILING NOTES

1. SUBMIT SHOP DRAWINGS AND CALCULATIONS SIGNED AND SEALED BY A FLORIDA REGISTERED ENGINEER
2. GUARDRAIL/ HANDRAIL SHALL COMPLY WITH THE FBC LATEST EDITION.
3. ALL WELDS SHALL BE GROUND SMOOTH
4. VERIFY DIMENSIONS IN FIELD PRIOR TO FABRICATION OF ANY MEMBER AND REPORT ANY DISCREPANCIES TO THE ARCHITECT'S OFFICE.
5. ALL STRUCTURAL ALUMINUM SHALL CONFORM 6061 T-6
6. ALL ALUMINUM RAILING SHALL HAVE A ARCHITECTURAL ANODIZED CLASS I FINISH (MIN. COATING THICKNESS OF .7 MILS)

ALLEGUEZ ARCHITECTURE, INC.

ARCHITECTURE
PLANNING INTERIOR DESIGN & CONSTRUCTION MANAGEMENT

7294 SW 48TH STREET
MIAMI, FLORIDA 33155
tel: 305.461.4001 fax: 305.461.6002
www.alleguezarchitecture.com
AA C002746

CONSULTANTS:

CIVIL ENGINEER
SRS ENGINEERING, INC.
5001 SW 74TH COURT, SUITE 201
MIAMI, FLORIDA 33155
(305) 662-8887 (FAX) 662-8858

STRUCTURAL ENGINEER
DOUGLAS WOOD ASSOCIATES, INC.
5040 NW 7th STREET, SUITE 820
MIAMI, FLORIDA 33126
(305) 461-3450 EXT 300

ELEC. MECH. PLUM. ENGINEER
SDM CONSULTING ENG.
135 ALMEIRA AVENUE
CORAL GABLES, FLORIDA 33134
(305) 446-2788 (FAX) 443-5944

LANDSCAPE ARCHITECT
LAURA LLERENA AND ASSOCIATES INC.
13170 SW 128TH STREET, SUITE 207
MIAMI, FLORIDA 33186
(305) 256-1199 (FAX) 256-1155

LEED CONSULTANT
ECSG ENERGY COST SOLUTIONS GROUP, LLC
1925 CALAIS DRIVE Suite 6
MIAMI BEACH, FLORIDA 33141
(305) 787-4133 FAX (786) 472-6812

PROJECT:

CORAL GABLES FIRE HOUSE No. 04

1345 SUNSET DRIVE
CORAL GABLES, FLORIDA 33143

OWNER:
CITY OF CORAL GABLES

OWNER'S REP.
ERNESTO PINO R.A.
305.460.5004

DRAWING TITLE:

SITE DETAILS

SEAL

Ana Alleguez, RA

Digitally signed by Ana Alleguez, RA
Date: 2021.05.26 17:22:41 -04'00'

ANA ALLEGUEZ, R.A.
LICENSE NO. 14190

DATE:
JUNE 10TH, 2021

REVISED:

CAD DRAWING NAME:
A104.dwg

SHEET NO.

A104

BOA SUBMITTAL