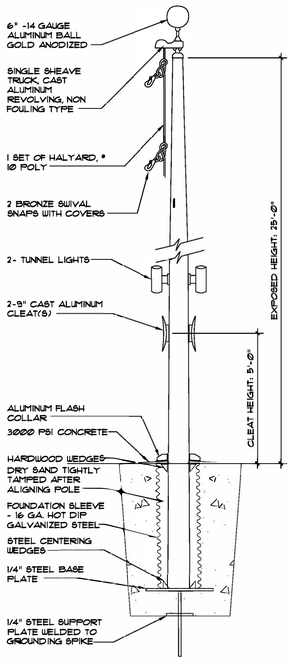

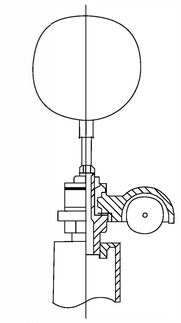

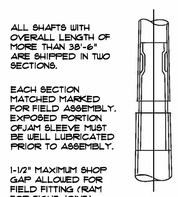

ALL SHAFTS WITH OVERALL LENGTH OF MORE THAN 38'-6" ARE SHIPPED IN TWO SECTIONS.

EACH SECTION MATCHED MARKED FOR FIELD ASSEMBLY. EXPOSED PORTION OR/JAM SLEEVE MUST BE WELL LUBRICATED PRIOR TO ASSEMBLY.

1-1/2" MAXIMUM SHOP GAP ALLOWED FOR FIELD FITTING (RAM FOR TIGHT JOINT)

1 A103 FLAG POLE DETAIL

SCALE: 1-1/2"=1'-0"

NOTE(S.) 1. SUBMIT SHOP DRAWINGS FOR ARCHITECT'S REVIEW

2. SPECS:
   GROUND SET TAPERED ALUMINUM FLAGPOLE: ALLOY 6063T6
   EXPOSED HEIGHT: 25'-0"
   BUTT DIAMETER: 6"
   TOP DIAMETER: 3-1/2"
   WALL THICKNESS: .250"
3. FLAG POLE SHALL HAVE INTEGRAL LIGHT
4. FLAG POLE SHALL BE HURRICANE SERIES EXTERNAL HALYARD GROUND SET CONE TAPERED ABLE TO WITHSTAND WINDS OF 150 MPH WITH INTEGRAL POLE MOUNTED LIGHT, (CLEAR ANODIZED) AS MANUFACTURER "EDER FLAGPOLE COMPANY, INC. OAK CREEK, WI." OR APPROVED EQUIVALENT

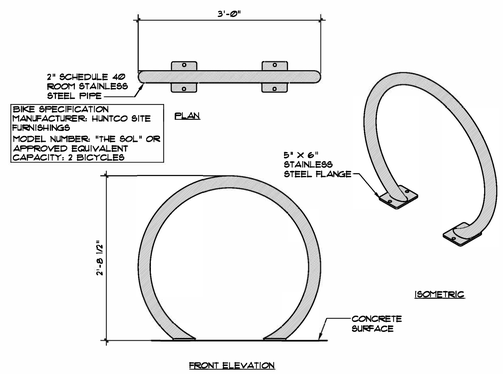

NOTE(S.) SUBMIT SHOP DRAWINGS FOR ARCHITECT'S REVIEW.

2 A103 BIKE RACK DETAIL

SCALE: 1"=1'-0"

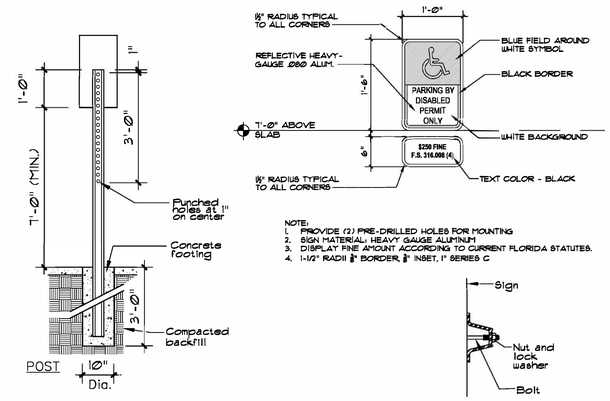

NOTE:
1. PROVIDE (2) PRE-DRILLED HOLES FOR MOUNTING
2. SIGN MATERIAL: HEAVY GAUGE ALUMINUM
3. DISPLAY FINE AMOUNT ACCORDING TO CURRENT FLORIDA STATUTES.
4. 1-1/2" RADII 3/8" BORDER, 3/8" INSET, 1" SERIES C

NOTE: (PAINT OPTION)

POST SHALL BE CAREFULLY CLEANED AND PHOSPHATED IMMEDIATELY AFTER PHOSPHATING POST SHALL BE COATED WITH A MODIFIED POLYESTER PAINT BY ELECTRODEPOSITION AND THEN THOROUGHLY BAKED, COLOR PERMA-GREEN PER FEDERAL STANDARD 595-A COLOR NUMBER 14109 (DARK LIMIT V)

3 A103 SIGN AND POST DETAILS

SCALE: N.T.S.

NOTES:

1. HANDICAP SIGN SHALL COMPLY WITH FLORIDA ACCESSIBILITY CODE FOR BUILDING CONSTRUCTION, FBC 2017 AND WITH THE LATEST REQUIREMENTS OF GOVERNMENT BODIES HAVING JURISDICTION.

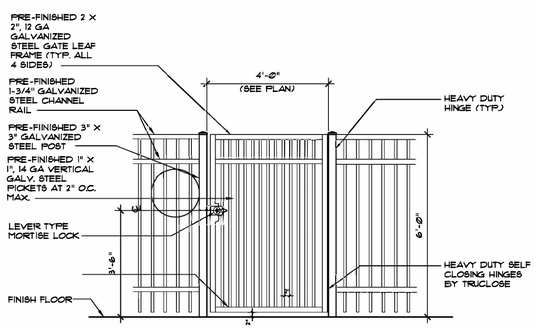

4 A103 GATE ELEVATION

SCALE: 1/2"=1'-0"

NOTE(S.) 1. PROVIDE GATE WITH GATE CLOSER, MAHMOTH-180 OR APPROVED EQUAL.

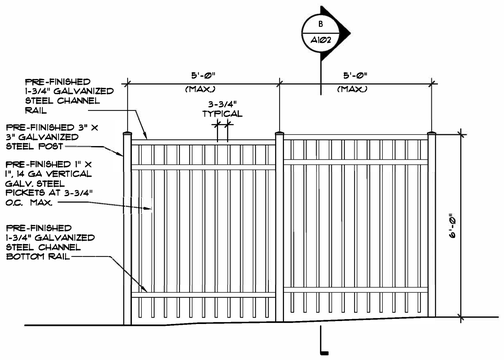

5 A103 TYPICAL PICKET FENCE ELEVATION

SCALE: 1/2"=1'-0"

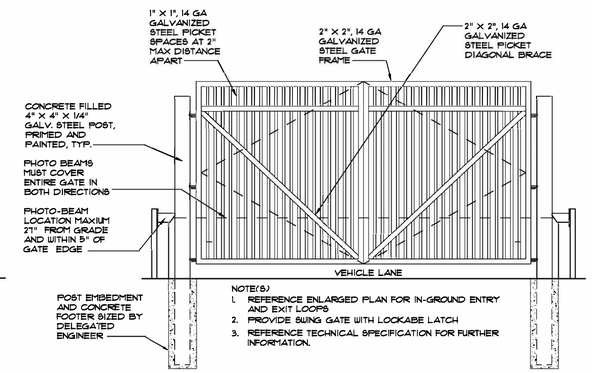

NOTE(S.)
1. REFERENCE ENLARGED PLAN FOR IN-GROUND ENTRY AND EXIT LOOPS
2. PROVIDE SWING GATE WITH LOCKABE LATCH
3. REFERENCE TECHNICAL SPECIFICATION FOR FURTHER INFORMATION.

6 A103 SWING GATE ELEVATION

SCALE: 1/2"=1'-0"

ALLEGUEZ ARCHITECTURE, INC.

ARCHITECTURE
PLANNING INTERIOR DESIGN & CONSTRUCTION MANAGEMENT

7294 SW 48TH STREET
MIAMI, FLORIDA 33155
tel: 305.461.4001 fax: 305.461.6002
www.alleguezarchitecture.com
AA C002746

CONSULTANTS:

CIVIL ENGINEER
SRS ENGINEERING, INC.
5001 SW 74TH COURT, SUITE 201
MIAMI, FLORIDA 33155
(305) 662-8887 (FAX) 662-8858

STRUCTURAL ENGINEER
DOUGLAS WOOD ASSOCIATES, INC.
5040 NW 7th STREET, SUITE 820
MIAMI, FLORIDA 33126
(305) 461-3450 EXT 300

ELEC. MECH. PLUM. ENGINEER
SDM CONSULTING ENG.
135 ALMEIRA AVENUE
CORAL GABLES, FLORIDA 33134
(305) 446-2788 (FAX) 443-5944

LANDSCAPE ARCHITECT
LAURA LLERENA AND ASSOCIATES INC.
13170 SW 128TH STREET, SUITE 207
MIAMI, FLORIDA 33186
(305) 256-1199 (FAX) 256-1155

LEED CONSULTANT
ECSG ENERGY COST SOLUTIONS GROUP, LLC
1925 CALAIS DRIVE Suite 6
MIAMI BEACH, FLORIDA 33141
(305) 787-4133 FAX (786) 472-6812

PROJECT:

CORAL GABLES FIRE HOUSE No. 04

1345 SUNSET DRIVE
CORAL GABLES, FLORIDA 33143

OWNER:
CITY OF CORAL GABLES

OWNER'S REP.
ERNESTO PINO R.A.
305.460.5004

DRAWING TITLE:

SITE DETAILS

SEAL:

Ana Alleguez RA

Digitally signed by Ana Alleguez, RA
Date: 2021.05.26 17:27:08 -04'00'

ANA ALLEGUEZ, R.A.
LICENSE NO. 14190

DATE:
JUNE 10TH, 2021

REVISED:

CAD DRAWING NAME:
A103.dwg

SHEET NO.

A103

BOA SUBMITTAL