Board of Adjustment Application

City of Coral Gables | Development Services Department | Phone# 305.460.5235

Preamble

Pursuant to the City Charter, and subject to those provisions, a Board of Adjustment is created to provide relief from hardships and errors in the application of the regulations.

Application review request

The undersigned applicant(s)/agent(s)/property owner(s) request(s) a Board of Adjustment hearing for the following application(s) (please check all that apply):

- ☐ Appeal
- ☒ Variance
- ☐ Other: _____

Property information

Property/project name: **146 Isla Dorada Dock and Boatlift Project**

Street address of the subject property: **146 Isla Dorada Boulevard**

Property Legal Description: Lot(s): **7**

Block(s): **20**

Section(s): **Cocoplum Sec 2**

Plat Book(s)/Page(s): **131-76**

Has there been a Board of Adjustment hearing on the property in the last year? **No**

Is this request the result of a Notice of Violation? **No**

Is this request the result of a deviation from an approved set of plans? **No**

Has the property owner owned the property for at least one (1) year? **Yes**

Current land use classification(s): **Single Family Residential**

Current zoning classification(s): **0100 Single Family- General**

Listing of all folio numbers for subject property:

03-4132-030-0070

Board of Adjustment Application

General information

Applicant(s)/Agent(s) Name(s): Ocean Consulting LLC, c/o Mr. Kirk Lofgren

Telephone#: 305-921-9344 Fax#: _____ Email: kirk @ oceanconsultingfl.com

Mailing Address: 340 Minorca Ave Suite 7, Coral Gables, FL 33134
(City) *(State)* *(ZIP Code)*

Property Owner(s) Name(s): Mr. Luis A. Rodriguez

Telephone#: _____ Fax#: _____ Email: josevelaiii @ pioneerluxuryhomes.com

Mailing Address: 9750 SW 63rd Court Miami, Florida 33156
(City) *(State)* *(ZIP Code)*

Property Owner(s) Name(s): _____

Telephone#: _____ Fax#: _____ Email: _____ @ _____

Mailing Address: _____
(City) *(State)* *(ZIP Code)*

Project Architect(s) Name(s): Dynamic Engineering Solutions c/o Mr. John Omslaer

Telephone#: 954-545-1740 Fax#: _____ Email: des_inc @ bellsouth.net

Mailing Address: 351 S. Cypress Road, Suite 303 Pompano Beach FL 33060
(City) *(State)* *(ZIP Code)*

Provide the date(s) and type(s) of application(s) previously filed with the City of Coral Gables and type of reviews, approvals, actions related to this request:

_____

_____

_____

Application received by: _____ Date: _____

Board of Adjustment Application

Application requirements and supporting information

The Development Services Department cannot accept applications that are not complete for any hearing before the Board of Adjustment. Failure to provide the information necessary pursuant to the established time frames included but not limited to application submittal, submission of revised documents, etc. for review by City Staff and the designated reviewing entity may cause application to be deferred without further review until such time the requested information is submitted.

Pre-application Meeting Requirements. A pre-application meeting is required to be held in advance of an application submittal to determine the information necessary to be filed with the application(s). The City reserves the right to request additional information as necessary.

Application submittal (order of documents). The order of the documents for the application submittal shall be as follows (required documents will be determined at pre-application meeting):

☐ Table of Contents with page numbers identifying all below documents.
☐ Completed Application.
☐ Applicant's proposal.
☐ Letter of intent.
☐ Standards for Variances #1 through #8.
☐ Owner's Affidavit.
☐ Proof of ownership if ownership of the property has changed in the last year.
☐ Full size set of plans (stamped by the Board of Architects).
☐ Plans in 11" x 17" size format (13 sets).
☐ Color photographs (35mm or digital photographs), must be labeled (13 sets).
☐ One (1) compact disc (CD) containing required plans and color photographs.
☐ Signed and sealed survey (indicate any tree disposition necessary if affected by proposed work).
☐ Aerial.
☐ Other (letter of support, rescheduling letter, etc.) _____.

Application supporting materials. The following application supporting materials shall be provided separately from the application submittal and are as follows:

☐ Application fees.
☐ One (1) original certified mailing list.
☐ Three (3) sets of mailing labels.
☐ City of Coral Gables Annual Registration Application and Issue Application Lobbyist forms.

Posting of the property. The City shall post the subject property with a City approved sign advising of the Board of Adjustment meeting date. The public notice posting shall be in accordance with the Zoning Code. The sign shall be installed ten (10) days prior to the meeting and shall not be removed until after the meeting, at which time it is the applicant's responsibility to remove the sign.

Board of Adjustment Application

Applicant/agent/property owner/architect affirmation and consent

(I) (We) affirm and certify to all of the following:

1. The application will not be heard unless the Applicant/Agent is present at the Board of Adjustment hearing.
2. The subject property will be posted with a City approved public notice sign. The sign shall be installed a minimum of ten (10) days prior to the meeting and shall not be removed until after the meeting, at which time it is the applicant's responsibility to remove the sign.
3. No application shall be accepted during the following time periods after the denial of a substantially similar application affecting the same property or any portion thereof:
   a. Conditional uses and variances: six (6) months.
   b. Comprehensive Plan Map Amendment, Comprehensive Plan Text Amendment, Zoning Code Map Amendment, Zoning Code Text Amendment, amendments and applications for abandonment and vacation of non-fee interests: twelve (12) months (Section 3-210. Resubmission of application affecting same property).
4. That the only variance or items being requested are those that have been specified in the written application for a variance, and any other code or plan issues will be corrected by modifying the plans to comply with the respective codes and ordinances of the City of Coral Gables.
5. That the applicant will be responsible for complying with all of the conditions and restrictions imposed by the Board of Adjustment in connection with the requested variance, and will take the necessary steps to make the variance effective if approved by the Board of Adjustment.
6. That it is the responsibility of the applicant to submit a complete application with all of the documents necessary for the Board of Adjustment to hear the applicant's request.
7. That the applicant is responsible for the submission and accuracy of a certified mailing list and three (3) sets of mailing labels according to the latest ad valorem tax record of all property owners within one-thousand (1,000) feet of the property for which a public hearing before the Board of Adjustment is being requested.
8. Any variance granted by the Board of Adjustment or the City Commission shall be in effect for twelve (12) months from the date of approval. If a permit is not issued within the twelve (12) months, and work commenced, then the variance shall become null and void. One (1) twelve (12) month extension of a variance may be granted by the Development Review Official.
9. That the application fee is not refundable or any portion thereof regardless of final resolution, deferment, or non-presentation to the Board of Adjustment.
10. That all the information contained in this application and all documentation submitted herewith is true to the best of (my) (our) knowledge and belief.
11. Understand that the application, all attachments and fees become a part of the official records of the City of Coral Gables and are not returnable.
12. Failure to provide the information necessary pursuant to the established time frames included but not limited to application submittal, submission of revised documents, etc. for review by City Staff and the designated reviewing entity may cause application to be deferred without further review until such time the requested information is submitted.
13. Applicant has read and understands all of the information in the City of Coral Gables Board of Adjustment Information brochure.
14. All representatives of the application have registered with and completed lobbyist forms for the City of Coral Gables City Clerk's office.

15. Understand that under Florida Law, all the information submitted as part of the application are public records.
16. Submission of the following:
    a. Warranty deed/tax record as proof of ownership for all properties considered as a part of the application request; or
    b. Authorized as the applicant(s)/agent(s) identified herein to file this application and act on behalf of all current property owner(s) and modify any valid City of Coral Gables entitlements in effect during the entire review process.

Applicant(s)/Agent(s) Signature:	Applicant(s)/Agent(s) Print Name: **Kirk Lofgren** **Ocean Consulting, LLC**
Address: **340 Minorca Ave, Suite 7, Coral Gables, FL 33134**	
Telephone: **305-921-9344**	Fax: **305-677-3254**
Email: **kirk@oceanconsultingfl.com; justina@oceanconsultingfl.com**	

NOTARIZATION

STATE OF FLORIDA/COUNTY OF
The foregoing instrument was acknowledged before me this ____ day of _____ by _____
(Signature of Notary Public - State of Florida)

(Print, Type or Stamp Commissioned Name of Notary Public)
☐ Personally Known OR ☐ Produced Identification; Type of Identification Produced _____

Property Owner(s) Signature:	Property Owner(s) Print Name: **Mr. Luis A. Rodriguez**
Property Owner(s) Signature:	Property Owner(s) Print Name:
Property Owner(s) Signature:	Property Owner(s) Print Name:
Address: **146 Isla Dorada Boulevard**	
Telephone:	Fax:
Email:	

NOTARIZATION

STATE OF FLORIDA/COUNTY OF

The foregoing instrument was acknowledged before me this 15th day of March by 2019

(Signature of Notary Public - State of Florida)

MARIANNA DUBINSKY
MY COMMISSION EXPIRES
DECEMBER 18, 2021
#GG 169190
Bonded thru
Notary Public Underwriters
NOTARY PUBLIC, STATE OF FLORIDA

(Print, Type or Stamp Commissioned Name of Notary Public)

☒ Personally Known OR ☐ Produced Identification; Type of Identification Produced _____

Board of Adjustment Application

Architect(s)/Engineer(s) Signature: 3/19/19	Architect(s)/Engineer(s) Print Name: **John Omslaer**
Address: **351 S. Cypress Rd Suite 303 Pompano Beach, FL 33060**	
Telephone: **954-545-1740**	Fax:
Email: **des_inc@bellsouth.net**	

LICENSE No. 52733 STATE OF FLORIDA PROFESSIONAL ENGINEER

SEAL

NOTARIZATION

STATE OF FLORIDA/COUNTY OF

The foregoing instrument was acknowledged before me this 19 day of March by 2019

(Signature of Notary Public - State of Florida)

ROBERTO J. SOLANA
Notary Public - State of Florida
Commission # GG 213093
My Comm. Expires May 1, 2022
Bonded through National Notary Assn.

(Print, Type or Stamp Commissioned Name of Notary Public)

☑ Personally Known OR ☐ Produced Identification; Type of Identification Produced _____

Attachments:

A. Board of Adjustment supporting information.
B. Board of Adjustment Calendar.
C. Board of Adjustment Application Fee Schedule.
D. Certified Mailing List Service Providers.

CFN 2018R0231455
OR BK 30943 Pgs 3628-3631 (4Pgs)
RECORDED 04/17/2018 12:10:14
DEED DOC TAX $29,700.00
HARVEY RUVIN, CLERK OF COURT
MIAMI-DADE COUNTY, FLORIDA

Prepared by and return to:
Raul E. Salas, Esq.
Raul E. Salas, P.A.
6301 Sunset Drive
Suite 203
Miami, Florida 33143
305-665-8625
Parcel Identification No: **03-4132-030-0070**

[Space Above This Line For Recording Data]

Warranty Deed

(STATUTORY FORM - SECTION 689.02, F.S.)

This Indenture made this 29th day of **March, 2018** between **Isla Dorada LLC, a Florida limited liability company** whose post office address is **146 Isla Dorada Blvd., Coral Gables, FL 33143** of the County of **Miami-Dade**, State of **Florida**, grantor, and **Luis A. Rodriguez and Agueda Lopez Benavides, husband and wife** whose post office address is **9750 SW 63 Court, Miami, FL 33156** of the County of **Miami-Dade**, State of **Florida**, grantee,

Witnesseth that said grantor, for and in consideration of the sum of TEN AND NO/100 DOLLARS ($10.00) and other good and valuable considerations to said grantor in hand paid by said grantee, the receipt whereof is hereby acknowledged, has granted, bargained, and sold to the said grantee, and grantee's heirs and assigns forever, the following described land, situate, lying and being in **Miami-Dade County, Florida**, to-wit:

> **Lot 7, in Block 20, of COCOPLUM SECTION TWO PLAT E, according to the Plat thereof, as recorded in Plat Book 131, at Page 76, of the Public Records of Miami-Dade County, Florida.**
>
> **Subject to:**
> 1. **Conditions, restrictions, limitations, and easements, of record, without intent to reimpose same.**
> 2. **Real estate taxes for the year 2018 and subsequent years.**

and said grantor does hereby fully warrant the title to said land, and will defend the same against lawful claims of all persons whomsoever.

IN WITNESS WHEREOF, the said party of the first part has hereunto set his hand and seal the day and year first above written.

DoubleTime® 4

Signed, sealed and delivered in our presence:

Witness Name: Ana M. Ladreda-Alvarez

Witness Name: Ron E. Soly

ISLA DORADA, LLC,
a Florida limited liability company

By: _____
Sergey Shirokikh, as Sole Member and Manager

State of Florida
County of Miami-Dade

The foregoing instrument was acknowledged before me this 29th day of March, 2018 by Sergey Shirokikh, Sole Member and Manager of Isla Dorada LLC, a Florida limited liability company. He/she [ ] is personally known to me or [✓] has produced Passport No. 730574823 as identification.

[Notary Seal]

ANA M. LADREDA-ALVAREZ
Commission # FF 177929
Expires January 9, 2019
Bonded Thru Troy Fain Insurance 800-385-7019

Notary Public _____

Printed Name: Ana M. Ladreda-Alvarez

My Commission Expires: 1/9/2019

ISLANDS
OF
COCOPLUM

February 21, 2018

Luis A. Rodriguez
Agueda Lopez
146 Isla Dorada Boulevard
Coral Gables, Florida 33143

RE: Membership Approval for 146 Isla Dorada Blvd. Lot 07, Block 20

Dear : Luis A. Rodriguez/ Agueda Lopez

We are pleased to inform you that your membership has been approved.
The Association welcomes you as a member of the "*Islands of Cocoplum Homeowners Association, Inc.*" community

The Association requires you to forward a copy of the ***Warranty Deed*** to our office on Isla Dorada at your earliest possible convenience. This document authorizes changes within the parcel that will indicate proper ownership.

Prospective owners are notified that the Association common elements include tennis courts, swimming pool, spa, weight room, exercise room and clubhouse. The clubhouse function rooms are available, at establish rates, for owners and invited guests. Further information is available within the Association administrative second floor office, located within the same facility.

Purchasers of parcels governed by a homeowners' association are bound by restrictive covenants and deed restrictions which are clothed with a strong presumption of validity arising from the fact that each parcel owner purchases the parcel knowing of and accepting the restrictions imposed.

Prior to any structural changes to your home, you must first obtain approval by the Associations' Architectural Review Board. Applications can be obtain by calling or visiting the Property Management office.

155 ISLA DORADA BOULEVARD- CORAL GABLES, FLORIDA 33143- TELEPHONE (305) 667-7386 – FAX (305) 667-6016

ISLANDS
OF
COCOPLUM

RE: Luis A. Rodriguez/Agueda Lopez – 146 Isla Dorada Blvd.- Coral Gables, FL 33143., Lot 07, Block 20

Wednesday morning lawn debris pick up can be placed in your swale area after 6 p.m. on Tuesday evening. Garbage pick up is as follow: Wednesday, recyclable and yard debris Tuesday & Friday regular trash. Leave your two (2) thirty gallon garbage (kitchen waste) containers in an area immediately adjacent to either side of the residence but not behind the front wall of your home. Back yard service is provided; do not take your cans to the curb. The City of Coral Gables Waste Management telephone number is 305-460-5346.

Please note, this approval is only for the individuals named in the application for membership approval for the above-referenced property. If there should be an assignment subsequent to this approval, than such assignment constitutes an automatic withdrawal of application for membership and this approval will be deemed automatically revoked. Any subsequent assignee will need to submit an application for approval along with the necessary non-refundable payments for such approval.

Should you require any further information, please feel free to contact the property management office.

Sincerely,
For the Board of Director

Carlos Linchenat, Community Manager
Islands of Cocoplum Homeowners Association

155 ISLA DORADA BOULEVARD- CORAL GABLES, FLORIDA 33143- TELEPHONE (305) 667-7386 – FAX (305) 667-6016

OCEAN CONSULTING, LLC · 340 Minorca Avenue, Suite 7 · Coral Gables, FL 33134
Tel: 305-921-9344 · Fax: 305-677-3254
www.oceanconsultingfl.com

18-8490

Revised May 22, 2019

City of Coral Gables
BOARD OF ADJUSTMENT
405 Biltmore Way
Coral Gables, FL 33134

RE: DOCK REPLACEMENT AT 146 ISLA DORADA BOULEVARD, IN THE CITY OF CORAL GABLES, MIAMI-DADE COUNTY, FLORIDA

Subject: Applicant's Proposal for Zoning Variance

Ladies and Gentlemen:

This is to respectfully request a variance from the City of Coral Gables Zoning Code for a proposed dock and boatlift project adjacent to 146 Isla Dorada Boulevard, in the City of Coral Gables, Miami-Dade County, Florida.

This variance addresses the following sections of the City of Coral Gables Zoning Code:

a. Article 5—Section 5-802(A): Variance to allow a proposed dock to extend seventeen feet and nine inches (17'-9") outward from the bank vs. no dock, wharf or similar structure shall be constructed more than five (5) feet outward from the bank, pursuant to Section 5-802(A) of the Coral Gables Zoning Code. The maximum proposed dimension of the dock from the bank is seventeen feet and nine inches (17'-9").

b. Article 5—Section 5-805(E): Variance to allow a boatlift to extend thirty-seven feet and nine inches (37'-9") from the bank of the waterway vs. watercraft lifts or floating watercraft lifts shall not extend beyond twenty-five (25) feet from the banks of waterways, pursuant to Section 5-805(E) of the Coral Gables Zoning Code. The boatlift extends an additional twenty feet (20') from the dock edge, for a maximum projection of thirty-seven feet and nine inches (37'-9"), as depicted on the attached plans. This application is requesting a 12'-9" variance for all offshore structures.

This variance is necessary so that the applicant is permitted to safely moor their vessel, a 42-foot Boston Whaler with a 31-inch draft. We propose an 8-post 40,00lb capacity Neptune boatlift and a double jet-ski floating vessel platform with a minimum side setback of fifteen feet (15'). The

current dock is in a state of disrepair and does not provide adequate water depths to moor this vessel.

Thank you for your review of this Letter of Proposal. Should you have any questions or require additional information, please do not hesitate to contact me at (305) 457-5573.

Respectfully Submitted,

Kirk Lofgren, *Ocean Consulting*
Applicant

OCEAN CONSULTING, LLC · 340 Minorca Avenue, Suite 7 · Coral Gables, FL 33134
Tel: 305-921-9344 · Fax: 305-677-3254
www.oceanconsultingfl.com

Revised May 22, 2019

City of Coral Gables
BOARD OF ADJUSTMENT
405 Biltmore Way
Coral Gables, FL 33134

RE: LETTER OF INTENT FOR THE DOCK AND BOATLIFT PROJECT AT 146 ISLA DORADA BOULEVARD, CITY OF CORAL GABLES, MIAMI-DADE COUNTY, FLORIDA (FOLIO NUMBER 03-4132-030-0070)

Subject: Letter of Intent for Zoning Variance

Ladies and Gentlemen:

The applicant proposes a Zoning Variance from the City of Coral Gables for a proposed dock, floating vessel platform, and boatlift project adjacent to 146 Isla Dorada Boulevard, in the City of Coral Gables, Miami-Dade County, Florida. To fully comply with the City of Coral Gables Zoning Code, the following variances are being requested:

a. Variance to allow a proposed dock to extend seventeen feet and nine inches (17'-9") outward from the bank vs. no dock, wharf or similar structure shall be constructed more than five (5) feet outward from the bank, pursuant to Section 5-802(A) of the Coral Gables Zoning Code. The maximum proposed dimension of the dock from the bank is seventeen feet and nine inches (17'-9")

b. Variance to allow a boatlift to extend thirty-seven and nine inches (37'-9") from the bank of the waterway vs. watercraft lifts or floating watercraft lifts shall not extend beyond twenty-five (25) feet from the banks of waterways, pursuant to Section 5-805(E) of the Coral Gables Zoning Code. The boatlift extends an additional twenty feet (20') from the dock edge, for a maximum projection of thirty-seven and nine inches (37'-9"), as depicted on the attached plans. This application is requesting a 12'-9" variance for all offshore structures.

Background: This is a replacement of an existing, previously-permitted dock with the addition of a 40,000 lb.-capacity Neptune boatlift and a floating vessel platform. The dock has been designed to allow for the safe mooring of a 42-foot Boston Whaler. The existing dock does not provide adequate water depth to moor this vessel. The proposed dock extends seventeen feet and nine inches (17'-9") into the waterway with fifteen foot (15') side setback from the east property

line to the edge of dock. The proposed boatlift extends an additional twenty feet (20') waterward of the dock, allowing for adequate depths.

Miami-Dade County Department of Environmental Resources Management (DERM) Findings: DERM's biological assessment (attached for reference) confirms that no environmental resources will be negatively affected by the proposed dock and boatlift. Further, the biological assessment shows that depths of the current dock are not sufficient in order to accommodate the applicant's 42' vessel. It is worth noting that the proposed dock and boatlift cross the R.E.R. D-5 Boundary on the West side. The neighbor to the west has approved the proposed Project and has agreed to sign a letter of consent. Finally, DERM preliminarily approved the plans on April 1, 2019 indicating they have no objection to the proposed dock and boatlift project. See attached for reference.

Florida Department of Environmental Protection: The Florida DEP issued a permit approval for this proposed dock and boatlift project on January 22, 2019. See attached for reference.

Thank you for your review of this letter and for understanding the circumstances for which these variances must be obtained.

Respectfully Submitted,

Kirk Lofgren, *Ocean Consulting*
Applicant

OCEAN CONSULTING, LLC · 340 Minorca Avenue, Suite 7 · Coral Gables, FL 33134
Tel: 305-921-9344 · Fax: 305-677-3254
www.oceanconsultingfl.com

18-8490

Revised May 22, 2019

CITY OF CORAL GABLES
BOARD OF ADJUSTMENT
405 Biltmore Way
Coral Gables, FL 33134

RE: LETTER OF RESPONSE FOR ZONING VARIANCE AT 146 ISLA DORADA BOULEVARD, IN THE CITY OF CORAL GABLES, MIAMI-DADE COUNTY, FLORIDA

Ladies and Gentlemen:

This is to respectfully submit a response to the eight zoning criteria, as interpreted from the Coral Gables Zoning Code, to allow for the replacement of the existing dock, and to install a new boatlift, at 146 Isla Dorada Boulevard, in the City of Coral Gables. The Project proposes to replace the existing dock, install a 40,000 lb-capacity boatlift and a floating vessel platform. The following criteria and responses are provided.

1. That special conditions and circumstances exist which are peculiar to the land, structure or building involved and which are not applicable to other lands, structures or buildings in the same zoning district.

   YES. THE EXISTING DOCK DOES NOT PROVIDE ADEQUATE WATER DEPTHS TO SAFELY MOOR THE APPLICANT'S VESSEL IN THIS CANAL. NEIGHBORING DOCKS EXTEND FURTHER OFFSHORE AS COMPARED TO THE SUBJECT SITE.

2. That the special conditions and circumstances do not result from the actions of the applicant.

   WATER DEPTHS ARE NATURALLY SHALLOW, AND THEREFORE A DOCK EXTENSION IS NECESSARY.

3. That granting the variance requested will not confer on the applicant any special privilege that is denied by these regulations to other lands, buildings or structures in the same zoning district.

   NO. THIS VARIANCE WILL NOT CONFER ANY SPECIAL PRIVILEGE TO THE APPLICANT. SIMILAR DOCK STRUCTURES AND EXTENSIONS EXIST ALONG THIS WATER FRONTAGE IN THIS AREA.

4. That literal interpretation of the provisions of these regulations would deprive the applicant of rights commonly enjoyed by other properties in the same zoning district under the terms of these regulations and would place unnecessary and undue hardship on the applicant.

   YES. ONLY WITH A VARIANCE WILL THE APPLICANT BE ABLE TO SAFELY MOOR HIS VESSELS.

5. That the variance granted is the minimum variance that will make possible the reasonable use of the land, building or structure.

   YES. THE PROPOSED DOCK EXTENDS THE MINIMUM DISTANCE WATERWARD SO AS TO REACH ADEQUATE WATER DEPTHS TO MOOR THE VESSELS.

6. That granting the variance will not change the use to one that is not permitted in the zoning district or different from other land in the same district.

   NO. GRANTING THE VARIANCE WILL NOT CHANGE THE USE. THE SAME USE OF THE STRUCTURE (AS A RESIDENTIAL DOCK) WILL BE MAINTAINED WITH A VARIANCE, AND THE RESIDENCE WILL REMAIN SINGLE-FAMILY.

7. That the granting of the variance will be in harmony with the general intent and purpose of these regulations, and that such variance will not be injurious to the area involved or otherwise detrimental to the public welfare.

   YES. THIS VARIANCE WILL NOT BE DETRIMENTAL TO THE PUBLIC WELFARE.

8. That the granting of the variance is appropriate for the continued preservation of an historic landmark or historic landmark district.

   THE PROPERTY IS NOT DESIGNATED HISTORIC.

Thank you for your review and consideration.

Respectfully Submitted,
OCEAN CONSULTING, LLC

Kirk Lofgren
Principal

KL: ERN
Enclosures

LOCATION MAP AND LEGAL DESCRIPTION

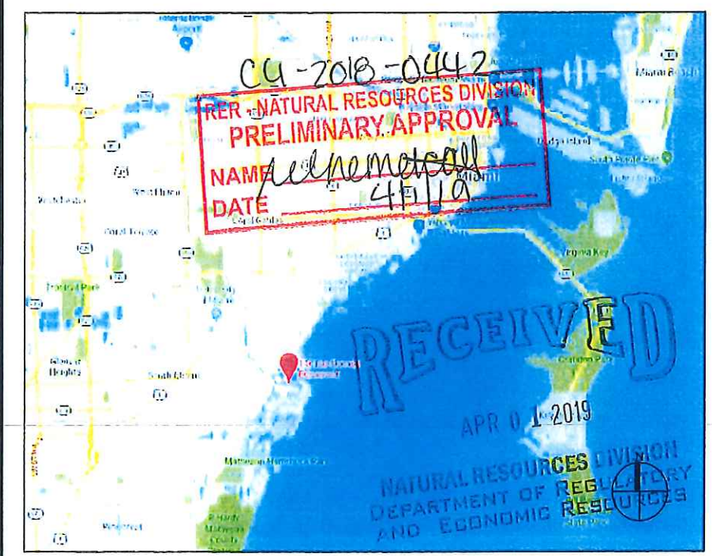

PROJECT SITE LOCATION:
146 Isla Dorada,
Coral Gables, FL 33156

LATITUDE: 25°57'27.44"N
LONGITUDE: 80° 7'24.90"W

FOLIO No.: 03-4132-030-0070

LEGAL DESCRIPTION:
COCOPLUM SEC 2 PLAT E
PB 131-76
LOT 7 BLK 20
LOT SIZE 24468 SQ FT
OR 13970-3714 0189 1

GENERAL NOTES:

1. ELEVATIONS SHOWN REFER TO THE NATIONAL GEODETIC VERTICAL DATUM (NCVD) OF 1929.
2. ALL DIMENSIONS ON PLANS ARE SUBJECT TO VERIFICATION IN THE FIELD.
3. IT IS THE INTENT OF THESE PLANS TO BE IN ACCORDANCE WITH APPLICABLE CODES AND AUTHORITIES HAVING JURISDICTION. ANY DISCREPANCIES BETWEEN THESE PLANS AND APPLICABLE CODES SHALL BE IMMEDIATELY BROUGHT TO THE ATTENTION OF ENGINEER BEFORE PROCEEDING WITH WORK. CONTRACTOR AND ALL SUBCONTRACTORS ARE RESPONSIBLE FOR ALL LINES, ELEVATIONS, AND MEASUREMENTS IN CONNECTION WITH THEIR WORK.
4. IT IS THE INTENT OF THESE PLANS AND THE RESPONSIBILITY OF THE CONTRACTOR TO COMPLY WITH LOCAL, STATE, AND FEDERAL ENVIRONMENTAL PERMITS ISSUED FOR THIS PROJECT. IT SHALL BE THE CONTRACTOR'S RESPONSIBILITY TO FAMILIARIZE AND GOVERN HIMSELF BY ALL PROVISIONS OF THESE PERMITS.
5. APPLICABLE BUILDING CODE: FLORIDA BUILDING CODE, 2017 EDITION (AND CURRENT ADDENDUMS).
6. APPROVED CONTRACTOR TO DETERMINE THE SUITABILITY OF EXISTING STRUCTURES AND VERIFY ALL DIMENSIONS. THE APPROVED CONTRACTOR IS RESPONSIBLE FOR ALL METHODS, MEANS, SEQUENCES AND PROCEDURES OF WORK.
7. DO NOT SCALE DRAWINGS FOR DIMENSIONS.
8. CONTRACTOR TO VERIFY LOCATION OF EXISTING UTILITIES PRIOR TO COMMENCING WORK.
9. CONTRACTOR TO PROPERLY FENCE AND SECURE AREA WITH BARRICADES.
10. ANY DEVIATION AND/OR SUBSTITUTION FROM THE INFORMATION PROVIDED HEREIN SHALL BE SUBMITTED TO THE ENGINEER FOR APPROVAL PRIOR TO COMMENCEMENT OF WORK.
11. ALL NEW MATERIALS AND/OR PATCHWORK SHALL BE PROVIDED TO MATCH EXISTING MATERIALS AND/OR ADJOINING WORK WHERE PRACTICAL EXCEPT AS SPECIFICALLY NOTED HEREIN.
12. LICENSED CONTRACTOR SHALL USE ALL POSSIBLE CARE TO PROTECT ALL EXISTING MATERIALS, SURFACES, AND FURNISHINGS FROM DAMAGE DURING ALL PHASES OF CONSTRUCTION.
13. THE LICENSED CONTRACTOR TO INSTALL AND REMOVE ALL SHORING AND BRACING AS REQUIRED FOR THE PROPER EXECUTION OF THE WORK.
14. ALL NEW WORK AND/OR MATERIALS SHALL CONFORM TO ALL REQUIREMENTS OF EACH ADMINISTRATIVE BODY HAVING JURISDICTION IN EACH PERTAINING CIRCUMSTANCE.
15. THE CONTRACTOR WILL EMPLOY AND MAINTAIN ADEQUATE SEDIMENT AND EROSION CONTROL MEASURES TO PROTECT BISCAYNE BAY FROM SEDIMENT AND CONSTRUCTION DEBRIS.

DOCK: LL 60 PSF

BOLTS

1. ALL BOLTS SHALL BE STAINLESS STEEL, UNLESS OTHERWISE NOTED.

WOOD

1. PRIMARY WOOD FRAMING MEMBERS SHALL BE NUMBER 1 PRESSURE TREATED MARINE GRADE SOUTHERN PINE OR BETTER.
2. ALL DIMENSIONS ON PLAN ARE SUBJECT TO VERIFICATION IN THE FIELD.

PILE DRIVING NOTES

1. PILE DRIVING OPERATIONS SHALL BE OBSERVED BY A SPECIAL INSPECTOR, INCLUDING TEST PILES SUFFICIENT TO DETERMINE THE APPROXIMATE LENGTH REQUIRED TO MEET DESIGN CAPACITY.
2. PILES SHALL BE DRIVEN USING AN APPROVED CUSHION BLOCK CONSISTING OF MATERIAL SO ARRANGED SO AS TO PROVIDE THE TRANSMISSION OF THE HAMMER ENERGY.
3. PILES SHALL BE DRIVEN TO REQUIRED MINIMUM 25 TON. BEARING CAPACITY.
4. PILES SHALL BE DRIVEN WITH A DROP HAMMER OR GRAVITY HAMMER PROVIDED THE HAMMER SHALL WEIGH NO LESS THAN 3,000 POUNDS, AND THE FALL OF THE HAMMER SHALL NOT EXCEED 6 FT.
5. PILES SHALL BE DRIVEN WITH A VARIATION OF NOT MORE THAN $\frac{1}{4}$" PER FOOT FROM THE VERTICAL, OR FROM THE BATTER LINE INDICATED, WITH A MAX VARIATION OF THE HEAD OF THE PILE FROM THE POSITION SHOWN ON THE PLANS OF NOT MORE THAN 3".
6. WHERE PILING MUST PENETRATE STRATA OFFERING HIGH RESISTANCE TO DRIVING, THE STRUCTURAL ENGINEER OF RECORD OR SPECIAL INSPECTOR MAY REQUIRE THAT PILES BE SET IN PRE-DRILLED OR PUNCHED HOLES. THE PILES SHALL REACH THEIR FINAL PENETRATION BY DRIVING.

146 ISLA DORADA DOCK PROJECT

Coral Gables, Florida

CLIENT:

PIONEER ARCHITECTURE LLC
c/o: MR. JOSE A. VELLA III
146 Isla Dorada
Coral Gables, FL 33156

ENVIRONMENTAL CONSULTANT:

OCEAN CONSULTING, LLC
340 Minorca Avenue, Suite 7
Coral Gables, Florida 33134
Tel: (305) 921-9344
Fax: (305) 677-3254

CONTRACTOR:

PROJECT ENGINEER:

DYNAMIC ENGINEERING SOLUTIONS, INC.
351 S. Cypress Road, Suite 303
Pompano Beach, FL 33060
Office - 954-545-1740
Fax - 954-545-1721

SEAL / SIGNATURE / DATE

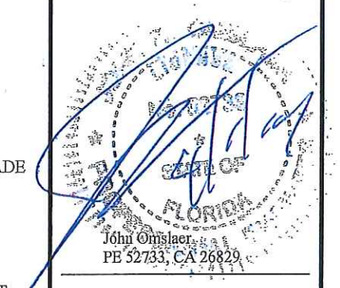

John Omslaer
PE 52733, CA 26829

PERMIT DRAWINGS

Issue #	Issue Date
1	March 29, 2019

PROJECT: 18-8490

PROJECT LOCATION & NOTES

SCALE : AS SHOWN
SHEET NO.
S-1

COCOPLUM HOMEOWNERS ASSOCIATION, INC.
ARCHITECTURAL REVIEW BOARD
"APPROVED"
DATE: 4/23/2019
SUBJECT TO: dock
MODIFICATION:
SIGNATURE

ARCHITECTURAL REVIEW BOARD QUALIFYING STATEMENT

Approval by the Cocoplum Architectural Review Board is limited to the aesthetic compliance of the Architectural Criterion as set forth in the Association By-Laws and does not include review of the Structural, Mechanical or Electrical components of the proposed structure within a home site in Cocoplum.

Approval by the Architectural Review Board does not relieve the Owner, The Architect, The Landscape Architect, the Engineering Consultants, the General Contractor, the Subcontractors and the Material Suppliers from compliance with all the requirements as set forth by the City of Coral Gables Building and Zoning Department, The South Florida Building Code, and any other requirements by Local, County, State and Federal Government Agencies having jurisdiction over any proposed construction within a home site including docks, seawalls and the protection of mangroves, wildlife and the environment.

In the event of non-compliance the Architectural Review Board reserves the right to revoke this approval without any prior or advance notice.

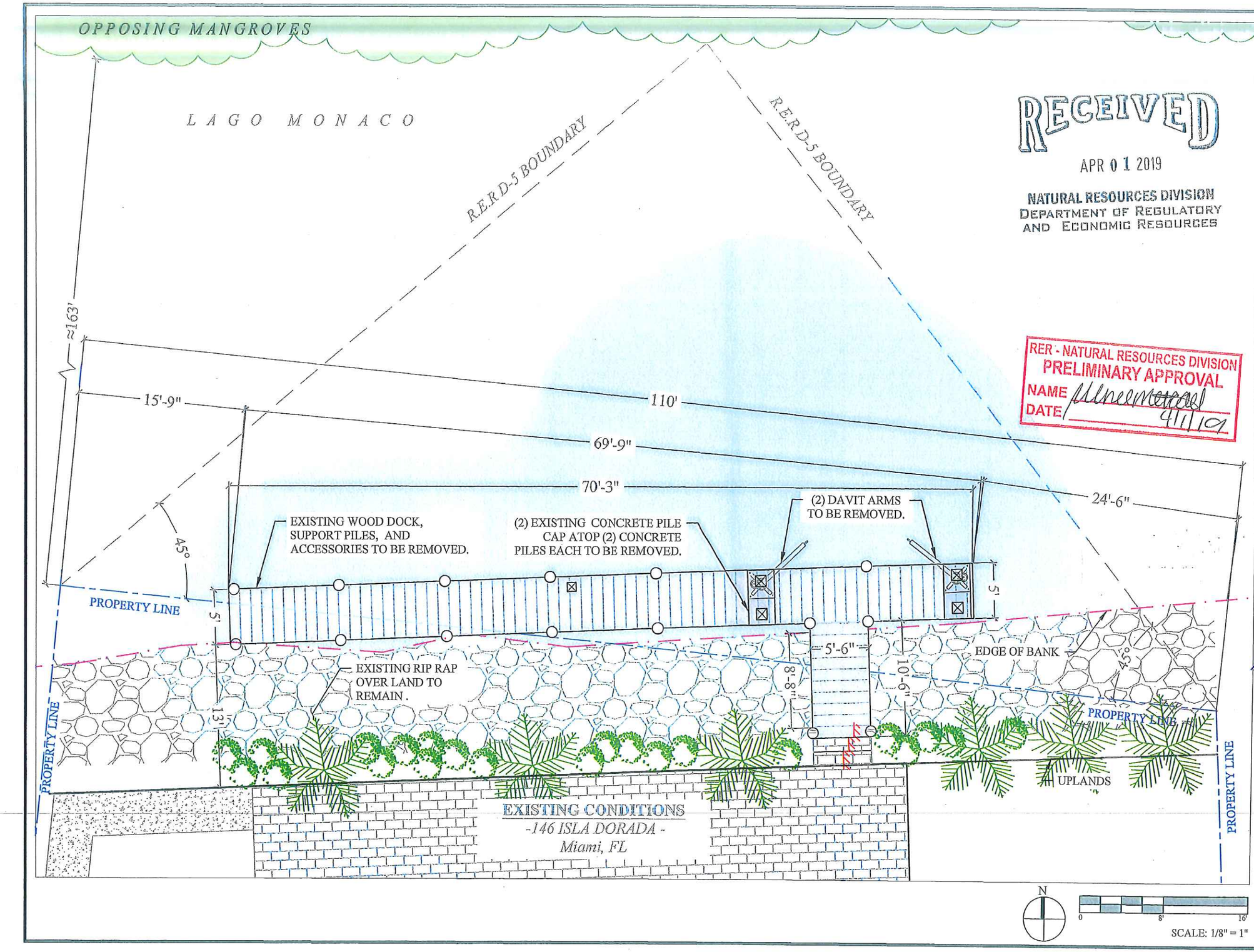

RECEIVED
APR 01 2019
NATURAL RESOURCES DIVISION
DEPARTMENT OF REGULATORY AND ECONOMIC RESOURCES

RER - NATURAL RESOURCES DIVISION
PRELIMINARY APPROVAL
NAME
DATE 4/1/19

146 ISLA DORADA DOCK PROJECT

Coral Gables, Florida

CLIENT:

PIONEER ARCHITECTURE LLC.
c/o: MR. JOSE A. VELLA III

146 Isla Dorada
Coral Gables, FL 33156

ENVIRONMENTAL CONSULTANT:

OCEAN CONSULTING, LLC
340 Minorca Avenue, Suite 7
Coral Gables, Florida 33134
Tel: (305) 921-9344
Fax: (305) 677-3254

CONTRACTOR:

PROJECT ENGINEER:

DYNAMIC ENGINEERING SOLUTIONS, INC.
351 S. Cypress Road, Suite 303
Pompano Beach, FL 33060
Office - 954-545-1740
Fax - 954-545-1721

SEAL / SIGNATURE / DATE

John Omslaer
PE 52733, CA 26829

PERMIT DRAWINGS

Issue #	Issue Date
1	March 29, 2019

PROJECT: 18-8490

EXISTING CONDITIONS

SCALE : AS SHOWN
SHEET NO.

S-2

COCOPLUM HOMEOWNERS ASSOCIATION, INC.
ARCHITECTURAL REVIEW BOARD
"APPROVED"
DATE: 4/23/2019
SUBJECT TO: doc/c
AUTHORIZATION:
SIGNATURE

ARCHITECTURAL REVIEW BOARD QUALIFYING STATEMENT

Approval by the Cocoplum Architectural Review Board is limited to aesthetic compliance of the Architectural Criterion as set forth in the Association By-Laws and does not include review of the Structural, Mechanical or Electrical components of the proposed structure within a home site in Cocoplum.

Approval by the Architectural Review Board does not relieve the Owner, The Architect, The Landscape Architect, the Engineering Consultants, the General Contractor, the Subcontractors and the Material Suppliers from compliance with all the requirements as set forth by the City of Coral Gables Building and Zoning Department, The South Florida Building Code, and any other requirements by Local, Municipal, State and Federal Government Agencies having jurisdiction over any proposed construction within a home site including docks, seawalls and the protection of mangroves, wildlife and the environment.

In the event of non-compliance, the Architectural Review Board reserves the right to revoke this approval without any prior or advance notice.

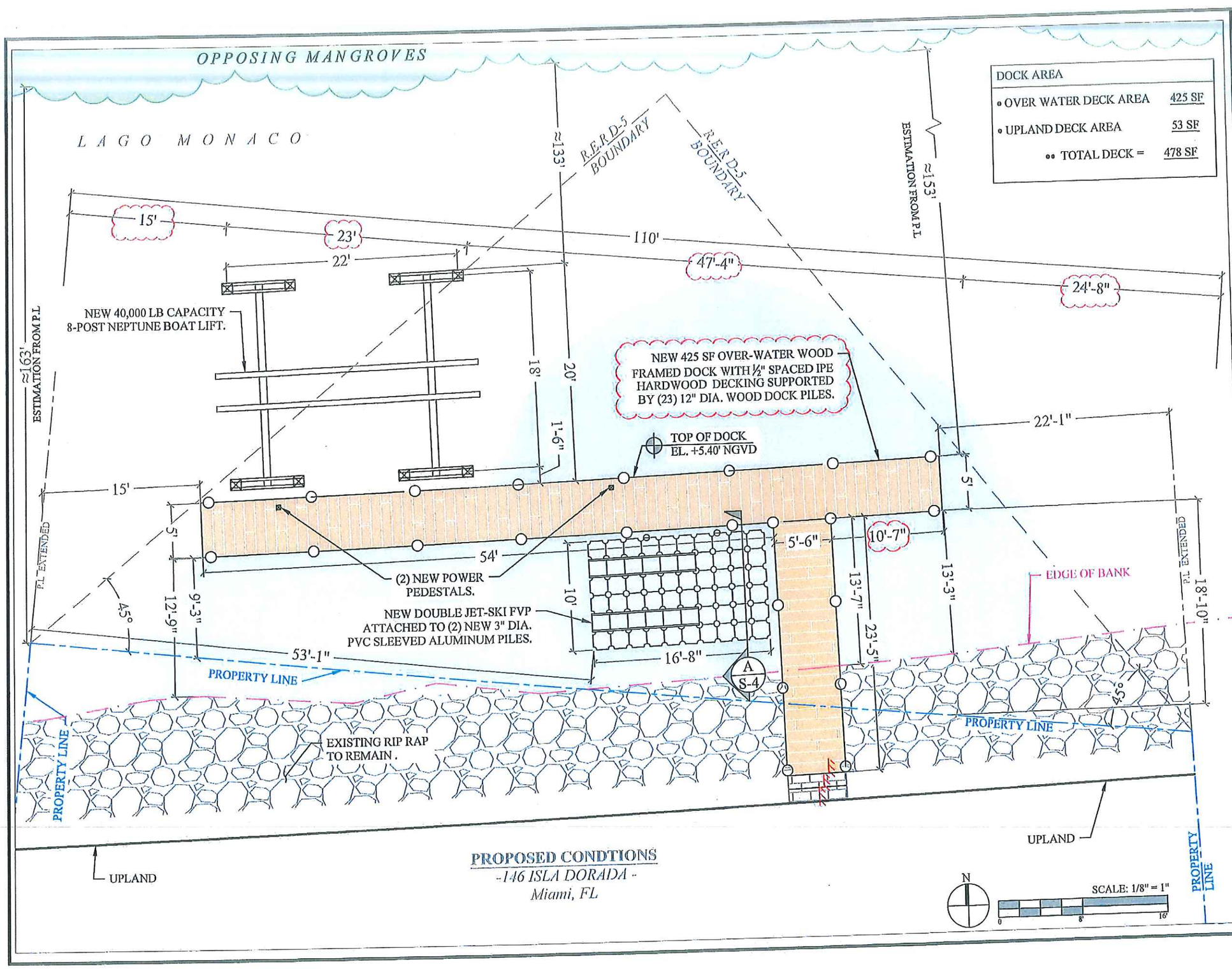

PROPOSED CONDTIONS
-146 ISLA DORADA -
Miami, FL

DOCK AREA	
◦ OVER WATER DECK AREA	425 SF
◦ UPLAND DECK AREA	53 SF
◦◦ TOTAL DECK =	478 SF

146 ISLA DORADA DOCK PROJECT

Coral Gables, Florida

CLIENT:
PIONEER ARCHITECTURE LLC.
c/o: MR. JOSE A. VELLA III
146 Isla Dorada
Coral Gables, FL 33156

ENVIRONMENTAL CONSULTANT:
OCEAN CONSULTING, LLC
340 Minorca Avenue, Suite 7
Coral Gables, Florida 33134
Tel: (305) 921-9344
Fax: (305) 677-3254

CONTRACTOR:

PROJECT ENGINEER:
DYNAMIC ENGINEERING SOLUTIONS, INC.
351 S. Cypress Road, Suite 303
Pompano Beach, FL 33060
Office - 954-545-1740
Fax - 954-545-1721

SEAL / SIGNATURE / DATE
JOHN H. OMSLAER LICENSE No. 52733 STATE OF FLORIDA PROFESSIONAL ENGINEER
5/20/19
John Omslaer
PE 52733, CA 26829

PERMIT DRAWINGS

Issue #	Issue Date
1	March 29, 2019
2	May 17, 2019

PROJECT: 18-8490 CLI-2018-0442

PROPOSED CONDITIONS

SCALE : AS SHOWN
SHEET NO.
S-3

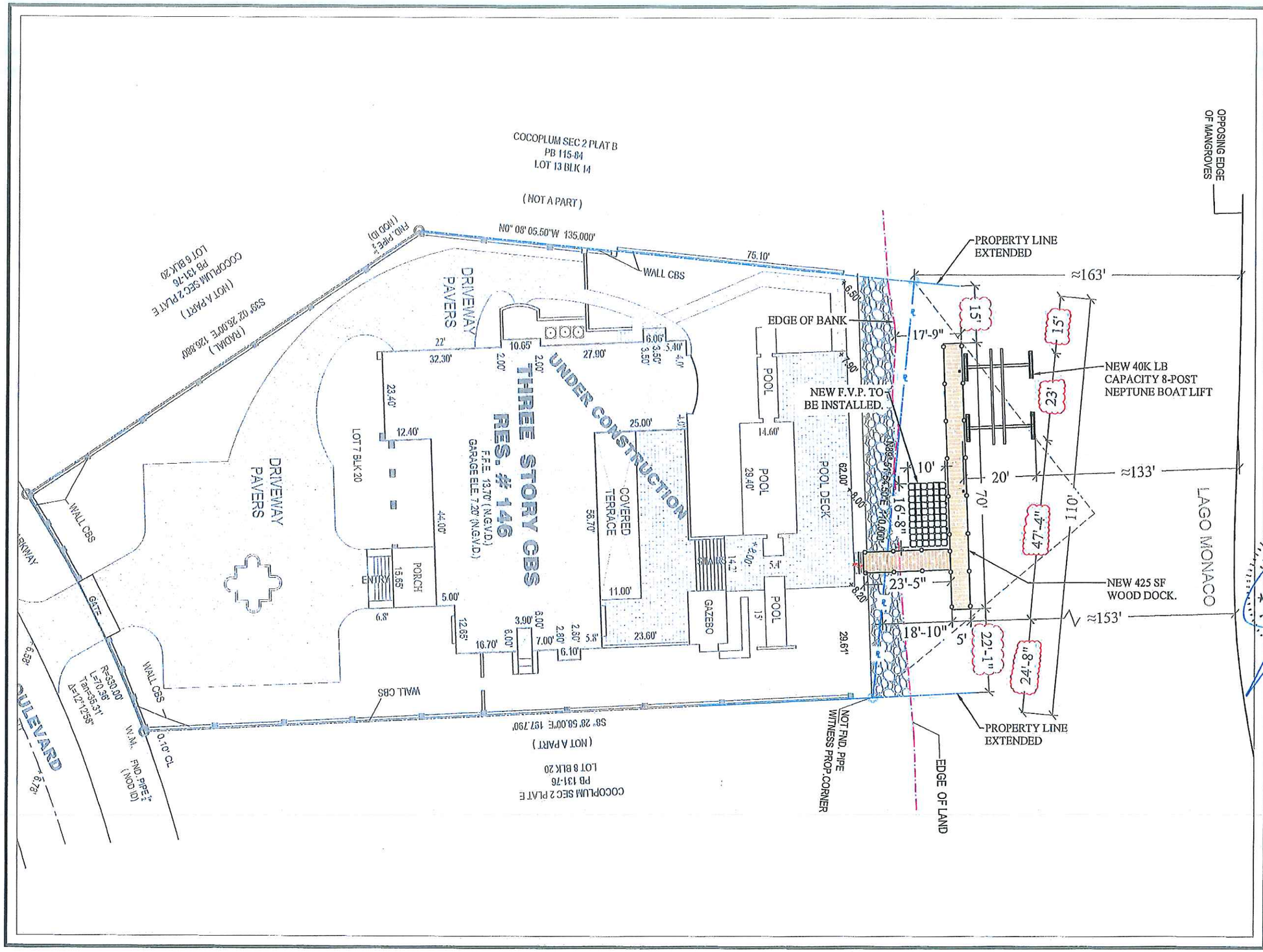

146 ISLA DORADA DOCK PROJECT

Coral Gables, Florida

CLIENT:

PIONEER ARCHITECTURE LLC
c/o: MR. JOSE A. VELLA III
146 Isla Dorada
Coral Gables, FL 33156

ENVIRONMENTAL CONSULTANT:

OCEAN CONSULTING, LLC
340 Minorca Avenue, Suite 7
Coral Gables, Florida 33134
Tel: (305) 921-9344
Fax: (305) 677-3254

CONTRACTOR:

PROJECT ENGINEER:

DYNAMIC ENGINEERING SOLUTIONS, INC.
351 S. Cypress Road, Suite 303
Pompano Beach, FL 33060
Office - 954-545-1740
Fax - 954-545-1721

SEAL / SIGNATURE / DATE

JOHN H. OMSLAER LICENSE No. 52733 STATE OF FLORIDA PROFESSIONAL ENGINEER

John Omslaer.
PE 52733, CA 26829

PERMIT DRAWINGS

Issue #	Issue Date
1	March 29, 2019
2	May 17, 2019

PROJECT: 18-8490 CLI-2018-0442

SITE PLAN

SCALE : AS SHOWN
SHEET NO.

S-3A

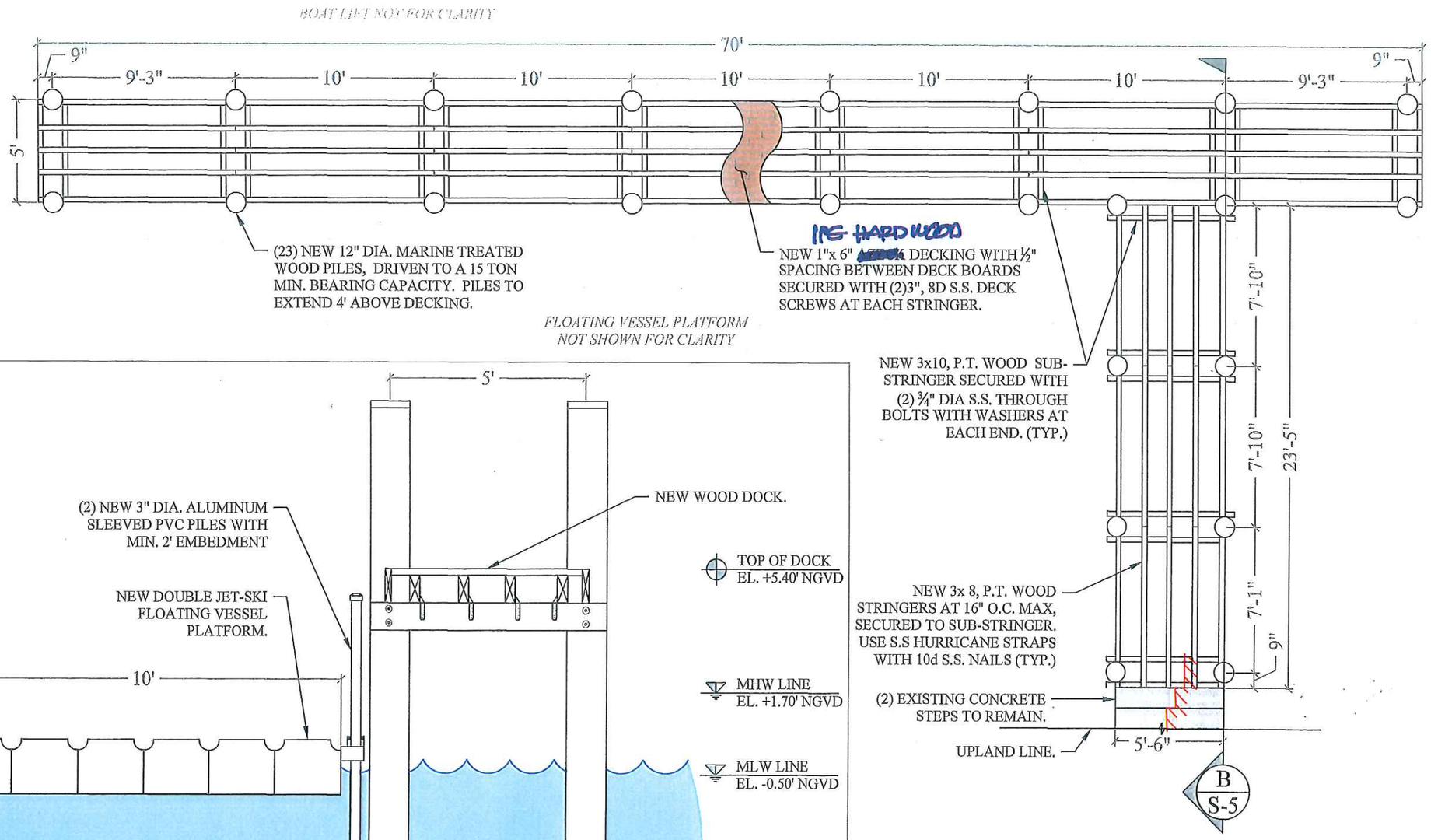

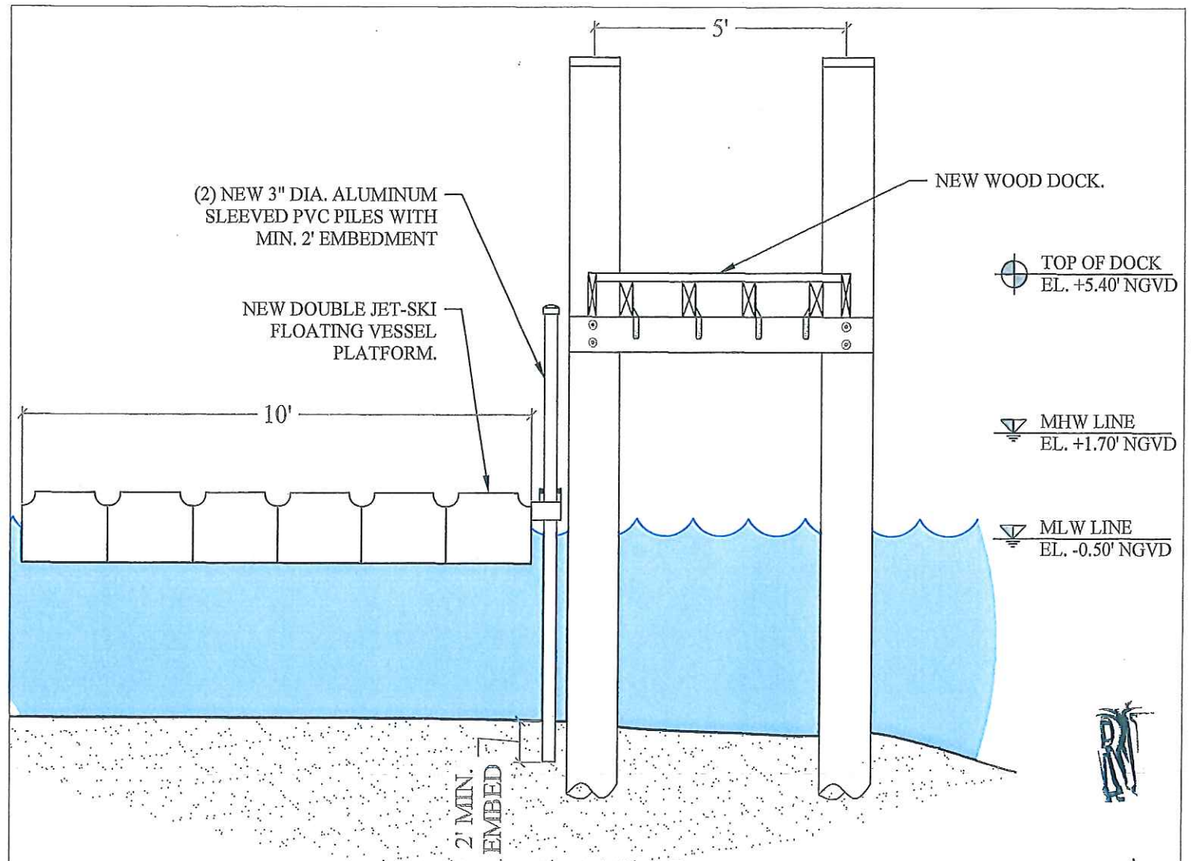

TYP. F.V.P SECTION A / S-4
SCALE: 3/8" = 1'-0"

RECEIVED
APR 01 2019
NATURAL RESOURCES DIVISION
ENVIRONMENTAL RESOURCES
ECONOMIC & REGULATORY RESOURCES

RER - NATURAL RESOURCES DIVISION
PRELIMINARY APPROVAL
NAME Renee Wood
DATE 4/1/19

DOCK FRAMING PLAN
0 5' 10'
SCALE: 3/16" = 1"

146 ISLA DORADA DOCK PROJECT

Coral Gables, Florida

CLIENT:

PIONEER ARCHITECTURE LLC.
c/o: MR. JOSE A. VELLA III
146 Isla Dorada
Coral Gables, FL 33156

ENVIRONMENTAL CONSULTANT:

OCEAN CONSULTING, LLC
340 Minorca Avenue, Suite 7
Coral Gables, Florida 33134
Tel: (305) 921-9344
Fax: (305) 677-3254

CONTRACTOR:

PROJECT ENGINEER:

DYNAMIC ENGINEERING SOLUTIONS, INC.
351 S. Cypress Road, Suite 303
Pompano Beach, FL 33060
Office - 954-545-1740
Fax - 954-545-1721

SEAL / SIGNATURE / DATE

John Omslaer
PE 52733, CA 26829

PERMIT DRAWINGS

Issue #	Issue Date
1	March 29, 2019

PROJECT: 18-8490

DOCK FRAMING PLAN & F.V.P SECTION

SCALE : AS SHOWN

SHEET NO.

S-4

COCOPLUM HOMEOWNERS ASSOCIATION, INC.
ARCHITECTURAL REVIEW BOARD
"APPROVED"

DATE: 4/23/2019
SUBMITTED TO: [illegible]
AUTHORIZATION: [illegible]
SIGNATURE

ARCHITECTURAL REVIEW BOARD QUALIFYING STATEMENT

Approval by the Cocoplum Architectural Review Board is limited to aesthetic compliance of the Architectural Criterion as contained in the Association By-Laws and does not include review of the Structural, Mechanical or Electrical components of any proposed structure within a home site in Cocoplum.

Approval by the Architectural Review Board does not relieve the Owner, The Architect, The Landscape Architect, the Engineering Consultants, the General Contractor, the Subcontractors and the Material Suppliers from compliance with all the requirements as set forth by the City of Coral Gables Building and Zoning Department, The South Florida Building Code, and any other requirements by Local, Municipal, State and Federal Government Agencies having jurisdiction over any proposed construction within a home site including docks, seawalls and the protection of mangroves, wildlife and the environment.

In the event of non-compliance, the Architectural Review Board reserves the right to revoke this approval without any prior or advance notice.

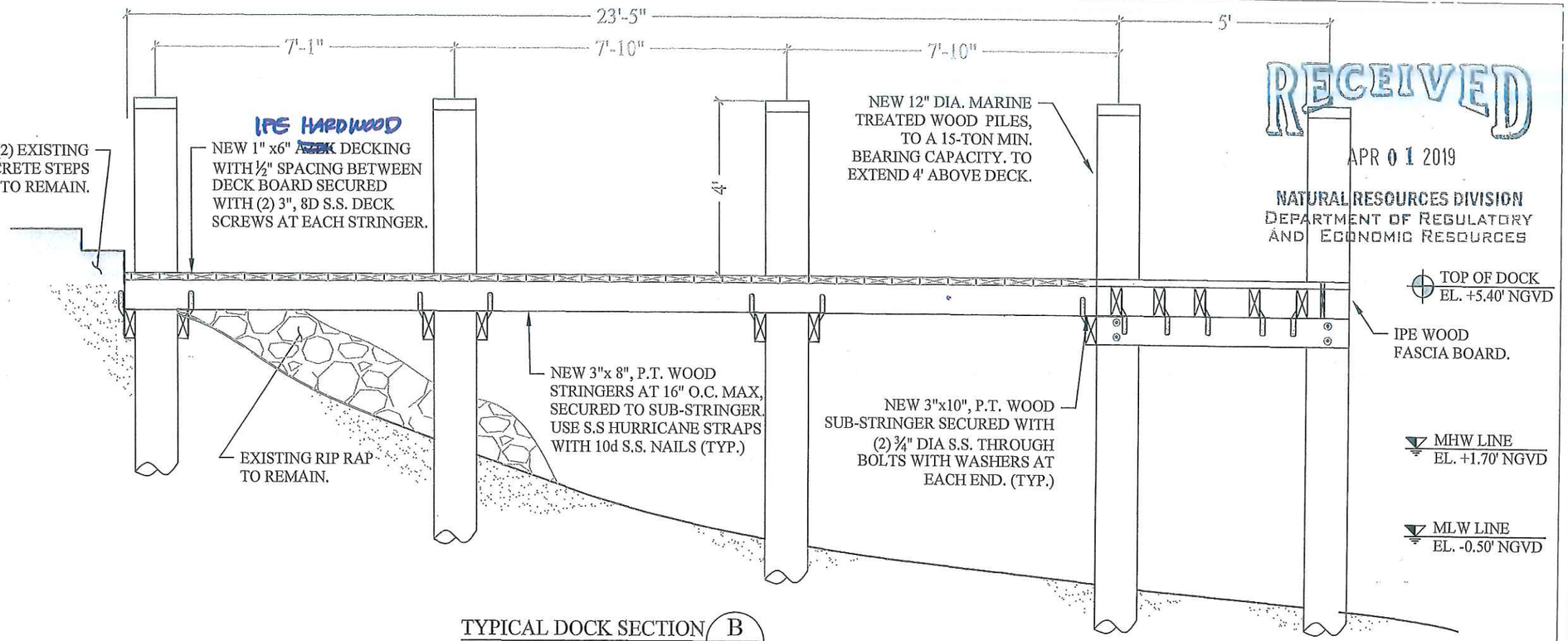

TYPICAL DOCK SECTION B / S-5
SCALE: 3/8" = 1'-0"

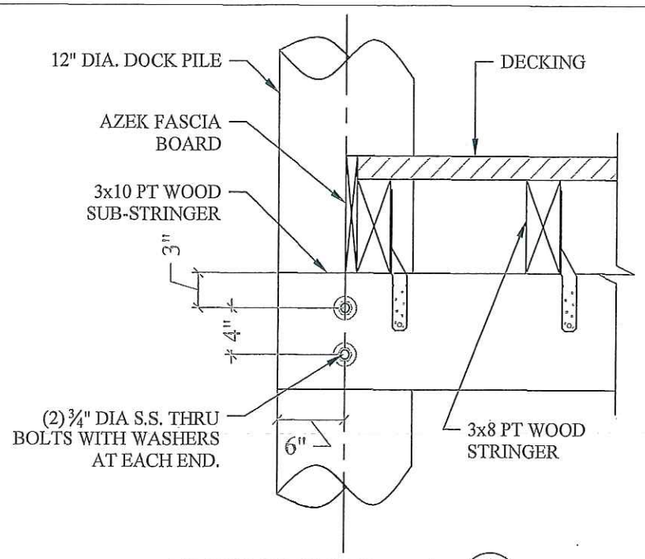

TYPICAL DOCK EDGE DETAIL 1 / S-5
SCALE: 1" = 1'-0"

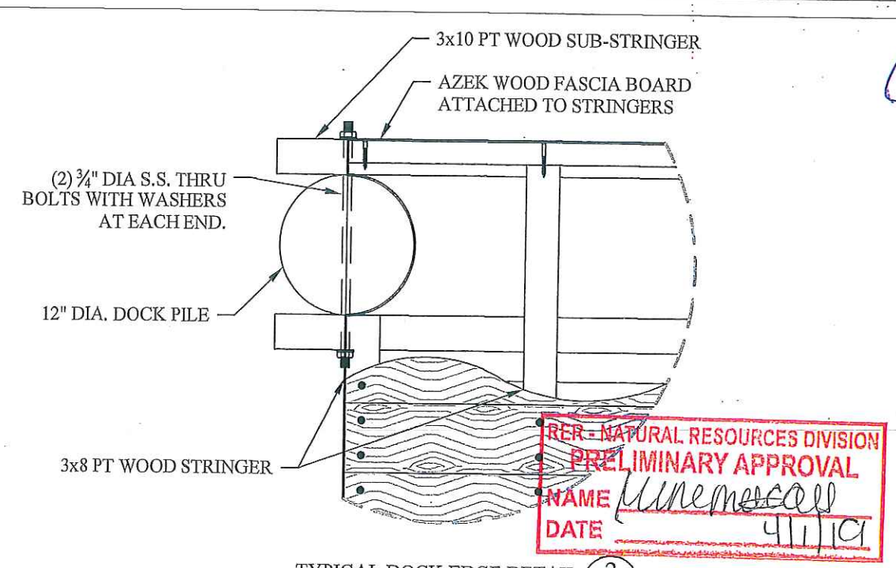

TYPICAL DOCK EDGE DETAIL 2 / S-5
SCALE: 1" = 1'-0"

146 ISLA DORADA DOCK PROJECT

Coral Gables, Florida

CLIENT:

PIONEER ARCHITECTURE LLC.
c/o: MR. JOSE A. VELLA III
146 Isla Dorada
Coral Gables, FL 33156

ENVIRONMENTAL CONSULTANT:

OCEAN CONSULTING, LLC
340 Minorca Avenue, Suite 7
Coral Gables, Florida 33134
Tel: (305) 921-9344
Fax: (305) 677-3254

CONTRACTOR:

PROJECT ENGINEER:

DYNAMIC ENGINEERING SOLUTIONS, INC.
351 S. Cypress Road, Suite 303
Pompano Beach, FL 33060
Office - 954-545-1740
Fax - 954-545-1721

SEAL / SIGNATURE / DATE

John Omstad
PE 52733; CA 26829

PERMIT DRAWINGS

Issue #	Issue Date
1	March 29, 2019

PROJECT: 18-8490

DOCK SECTION & DOCK PILE DETAIL

SCALE : AS SHOWN
SHEET NO.

S-5

CO[illegible] HOMEOWNERS ASSOCIATION, INC.
A[illegible]ITECTURAL REVIEW BOARD
"APPROVED"
DATE: 4/23/2019
SU[illegible]CT TO: [illegible]
W[illegible]ORIZATION: [illegible]
SIG[illegible]URE

[illegible] REVIEW BOARD QUALIFYING STATEMENT

A[illegible] by the Cocoplum Architectural Review Board is Li[illegible] to aesthetic compliance of the Architectural Criterion as [illegible] forth in the Association By-Laws and does not include re[illegible] the Structural, Mechanical or Electrical components o[illegible] proposed structure within a home site in Cocoplum.

Ap[illegible]al by the Architectural Review Board does not relieve th[illegible]or, The Architect, The Landscape Architect, the En[illegible]ering Consultants, the General Contractor, the S[illegible]ers and the Material Suppliers from compliance w[illegible] requirements as set forth by the City of Coral Ga[illegible] Building and Zoning Department, The South Florida B[illegible] Co[illegible], and any other requirements by Local, M[illegible]al, State and Federal Government Agencies having ju[illegible]ver any proposed construction within a home site i[illegible] docks, seawalls and the protection of mr[illegible]ves, wildlife and the environment.

In the event of non-compliance, the Architectural Review B[illegible] reserves the right to revoke this approval without any prior or advance notice.

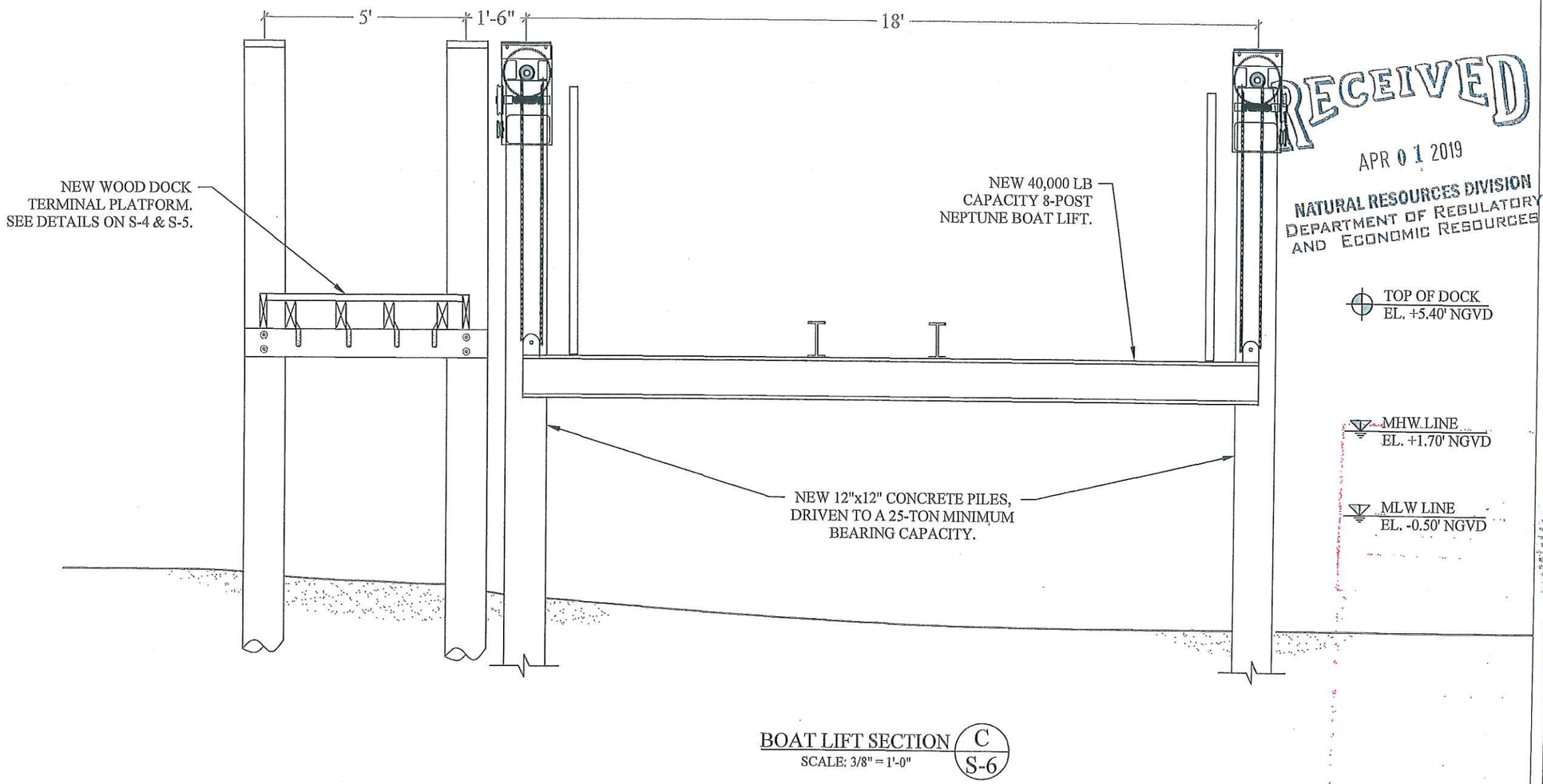

BOAT LIFT SECTION C/S-6
SCALE: 3/8" = 1'-0"

146 ISLA DORADA DOCK PROJECT

Coral Gables, Florida

CLIENT:

PIONEER ARCHITECTURE LLC.
c/o: MR. JOSE A. VELLA III
146 Isla Dorada
Coral Gables, FL 33156

ENVIRONMENTAL CONSULTANT:

OCEAN CONSULTING, LLC
340 Minorca Avenue, Suite 7
Coral Gables, Florida 33134
Tel: (305) 921-9344
Fax: (305) 677-3254

CONTRACTOR:

PROJECT ENGINEER:

DYNAMIC ENGINEERING SOLUTIONS, INC.
351 S. Cypress Road, Suite 303
Pompano Beach, FL 33060
Office - 954-545-1740
Fax - 954-545-1721

SEAL / SIGNATURE / DATE

John Onsiaet V
PE 52733, CA 26829

PERMIT DRAWINGS

Issue #	Issue Date
1	March 29, 2019

PROJECT: 18-8490

BOAT LIFT SECTION & PILE DETAIL

SCALE : AS SHOWN
SHEET NO.

S-6

COCOPLUM HOMEOWNERS ASSOCIATION, INC.
ARCHITECTURAL REVIEW BOARD
"APPROVED"
DATE: 4/23/2019
SUBJECT TO: dock
AUTHORIZATION:
SIGNATURE

ARCHITECTURAL REVIEW BOARD QUALIFYING STATEMENT

Approval by the Cocoplum Architectural Review Board is Limited to aesthetic compliance of the Architectural Criterion as set forth in the Association By-Laws and does not include review of the Structural, Mechanical or Electrical components of any proposed structure within a home site in Cocoplum.

Approval by the Architectural Review Board does not relieve the Owner, The Architect, The Landscape Architect, the Engineering Consultants, the General Contractor, the Subcontractors and the Material Suppliers from compliance with all the requirements as set forth by the City of Coral Gables Building and Zoning Department, The South Florida Building Code, and any other requirements by Local, Municipal, State and Federal Government Agencies having jurisdiction over any proposed construction within a home site including docks, seawalls and the protection of mangroves, wildlife and the environment.

In the event of non-compliance, the Architectural Review Board reserves the right to revoke this approval without any prior or advance notice.

Direct Drive 8-Post Yacht Lifts

- All Aluminum and Stainless Steel Construction
- Direct Drive with Industrial Duty Stainless Steel Motors
- Massive, Solid Aluminum Grooved Winders with Exclusive SEArmor Corrosion Resistant Coating
- Heavy Duty, Easily Adjustable Guide Poles
- Solid Aluminum Bearing Blocks with Delrin Bearings
- Welded Construction (not bolted)
- Stainless Steel Cables
- Self-Adjusting Cable Keepers
- Wireless Remote Control and Limit Switch
- Optional Electrical Controls with Multiple Switches
- 10 Year Limited Warranty

***See our "Complete list of Other Accessories"

Specifications

Size	Top Carrier Dimensions	Lifter Beam Dimensions	Horse Power	Volt and Amperage	Cable Size	Winders Drive Shaft	Vertical Travel	Bunks	Pile Size
30,000 lb. (w/remote)	6" Channel	12" x 16' I-Beam	(4) 1 HP or (4) 2 HP Stainless Steel	240V/30A or 60A	3/8" Stainless Steel	Mil-Spec Hardened Grooved Winders	12'	3" x 12" x 20'	(8) 10" Driven Pilings
40,000 lb. (w/remote)	Twin I-Beam	Double I-Beam 16' – 20'	Enclosed HD 2 HP Stainless Steel Motors w/Brakes	240V/60A	3/8" Stainless Steel	Mil-Spec Hardened Solid Grooved Winders	12'	5" x 12" x 20'	(8) 10" – 12" Driven Pilings
50,000 lb. (w/remote)	Twin I-Beam	Double I-Beam 16' – 20'	Enclosed HD 2 HP Stainless Steel Motors w/Brakes	240V/60A	7/16" Stainless Steel	Mil-Spec Hardened Solid Grooved Winders	12'	5" x 12" x 20'	(8) 10" – 12" Driven Pilings
60,000 lb. (w/remote)	Twin I-Beam	Double I-Beam 12" 18' – 20'	Enclosed HD 2 HP Stainless Steel Motors w/Brakes	240V/60A	7/16" Stainless Steel	Mil-Spec Hardened Solid Grooved Winders	12'	5" x 12" x 20'	(8) 12" Driven Pilings
70,000 lb. (w/remote)	Twin I-Beam	Triple I-Beam 12" Double Lifters 18' – 21'	Enclosed HD 2 HP Stainless Steel Motors w/Brakes	240V/60A	7/16" Stainless Steel	Mil-Spec Hardened Solid Grooved Winders	12'	5" x 12" x 20'	(8) 12" Driven Pilings
80,000 lb (w/remote)	Twin I-Beam	Triple I-Beam 12" Double Lifters 20' – 21'	Enclosed HD 2 HP Stainless Steel Motors w/Brakes	240V/60A	7/16" Stainless Steel	Mil-Spec Hardened Solid Grooved Winders	12'	8" x 12" x 20'	(8) 12" Concrete Driven Pilings
120,000 lb (w/remote)	Twin I-Beam	Double I-Beam 18" Quad Lifters 20' – 22'	Enclosed HD 3 HP Stainless Steel Motors w/Brakes	240V/80A	7/16" Stainless Steel	Mil-Spec Hardened Solid Grooved Winders	12'	8" x 12" x 20'	(8) 12" Concrete Driven Pilings
180,000 lb (w/remote)	Twin I-Beam	Double I-Beam 18" Quad Lifters 20' – 22'	Enclosed HD 5 HP Stainless Steel Motors w/Brakes	240V/80A	7/16" Stainless Steel	Mil-Spec Hardened Solid Grooved Winders	12'	8" x 12" x 20'	(8) 12" Concrete Driven Pilings

146 ISLA DORADA DOCK PROJECT

Coral Gables, Florida

CLIENT:
PIONEER ARCHITECTURE LLC.
c/o: MR. JOSE A. VELLA III
146 Isla Dorada
Coral Gables, FL 33156

ENVIRONMENTAL CONSULTANT:
OCEAN CONSULTING, LLC
340 Minorca Avenue, Suite 7
Coral Gables, Florida 33134
Tel: (305) 921-9344
Fax: (305) 677-3254

CONTRACTOR:

PROJECT ENGINEER:
DYNAMIC ENGINEERING SOLUTIONS, INC.
351 S. Cypress Road, Suite 303
Pompano Beach, FL 33060
Office - 954-545-1740
Fax - 954-545-1721

SEAL / SIGNATURE / DATE
John Ohnsler
PE 52733, CA 26829

PERMIT DRAWINGS

Issue #	Issue Date
1	March 29, 2019

PROJECT: 18-8490

BOATLIFT SPECIFICATIONS

SCALE : AS SHOWN
SHEET NO.
S-7

City of Coral Gables
Development Services

AB-19-04-5484
146 ISLA DORADA BLVD

FINAL

Folio #: **03-4132-030-0070**

Permit Description: RESIDENTIAL *DOCK & BOATLIFT $25000

	Section	Approved By	Approved Date
	BOARD OF ARCH.		
	BOARD OF ARCH.		
	MED BONUS		
	MED BONUS		
✓	ADMIN APPROVAL	CBM	24 APR 19

AS NOTED

The Board of Architects is responsible for determing whether development applications satisfy the Design Review Standards set out in Article 5, Division 6 of the City of Coral Gables Zoning Code

City of Coral Gables
Development Services

PW-19-04-5780
146 ISLA DORADA BLVD #

Folio #: **03-4132-030-0070**
Permit Description: NEW WOOD DOCK & BOATLIFT $25000

EL _____
ME _____
PL _____

	Section	Approved By	Approved Date
☐	BUILDING	MH	4/26/19
☐	CONCURRENCY		
☐	ELECTRICAL		
☐	FEMA		
☐	FIRE		
☐	HANDICAP		
☐	HISTORICAL		
☐	LANDSCAPE		
☐	MECHANICAL		
☐	PLUMBING		
☐	PUBLIC WORKS		
☐	STRUCTURAL	JMD	5/14/19
☐	ZONING		
☐			
☐	OWNER BUILDER		

Subject to compliance with all Federal, State, County and City rules and regulations. City assumes no responsibility for accuracy of/or results from these plans.
THIS COPY OF PLANS MUST BE AVAILABLE ON BUILDING SITE OR AN INSPECTION WILL NOT BE MADE.

APPROVAL OF THIS SET OF PLANS DOES NOT CONSTITUTE APPROVAL OF ANY STRUCTURE OR CONDITION NOT IN COMPLIANCE WITH ANY APPLICABLE CODES

R5/8/19

D. OD
05/02/19

COCOPLUM HOMEOWNERS ASSOCIATION, INC.
ARCHITECTURAL REVIEW BOARD
"APPROVED"
DATE: 4/23/2019
SUBJECT TO: doc/g
AUTHORIZATION: [signature]
SIGNATURE

ARCHITECTURAL REVIEW BOARD QUALIFYING STATEMENT
Approval by the Cocoplum Architectural Review Board is Limited to aesthetic compliance of the Architectural Criterion as set forth in the Association By-Laws and does not include review of the Structural, Mechanical or Electrical components of any proposed structure within a home site in Cocoplum.
Approval by the Architectural Review Board does not relieve the Owner, The Architect, The Landscape Architect, the Engineering Consultants, the General Contractor, the Subcontractors and the Material Suppliers from compliance with all the requirements as set forth by the City of Coral Gables Building and Zoning Department, The South Florida Building Code, and any other requirements by Local, Municipal, State and Federal Government Agencies having jurisdiction over any proposed construction within a home site including docks, seawalls and the protection of mangroves, wildlife and the environment.
In the event of non-compliance, the Architectural Review Board reserves the right to revoke this approval without any prior or advance notice.

Special Inspector required for the following:

☐ Special Inspector for PILING
☐ Special Inspector for REINFORCED MASONRY
☐ Special Inspector for _____

146 Isla Dorada Blvd Property Photographs

Front View of Property

North View of Dock

East View of Dock

West View of Dock and Davit

Northeast View of Davit

CLI-2018-0442 / Rodriguez

IN-WATER ASSESSMENT

Inspectors Visit 1: R. Alhale, L. Precht

Resources: Red Mangroves (< 6 leaves), Seagrape, Checkered puffer, Gracilaria spp., tube sponges, Cyanobacterial mat, Mangrove Snapper, Flat Tree Oysters, Goby, Seaside Mahoe (EXOTIC).

ALL DEPTHS ADJUSTED TO MLW USING ADJUSTMENT OF 1.2' AT 11:41 AM ON DECEMBER 5, 2018 AND 2.0' AT 10:35 AM ON DECEMBER 11, 2018.

LEGEND

Z = WATER DEPTH
WW = WATERWARD
MLW: MEAN LOW WATER
LF = LINEAR FEET

SILTY BOTTOM

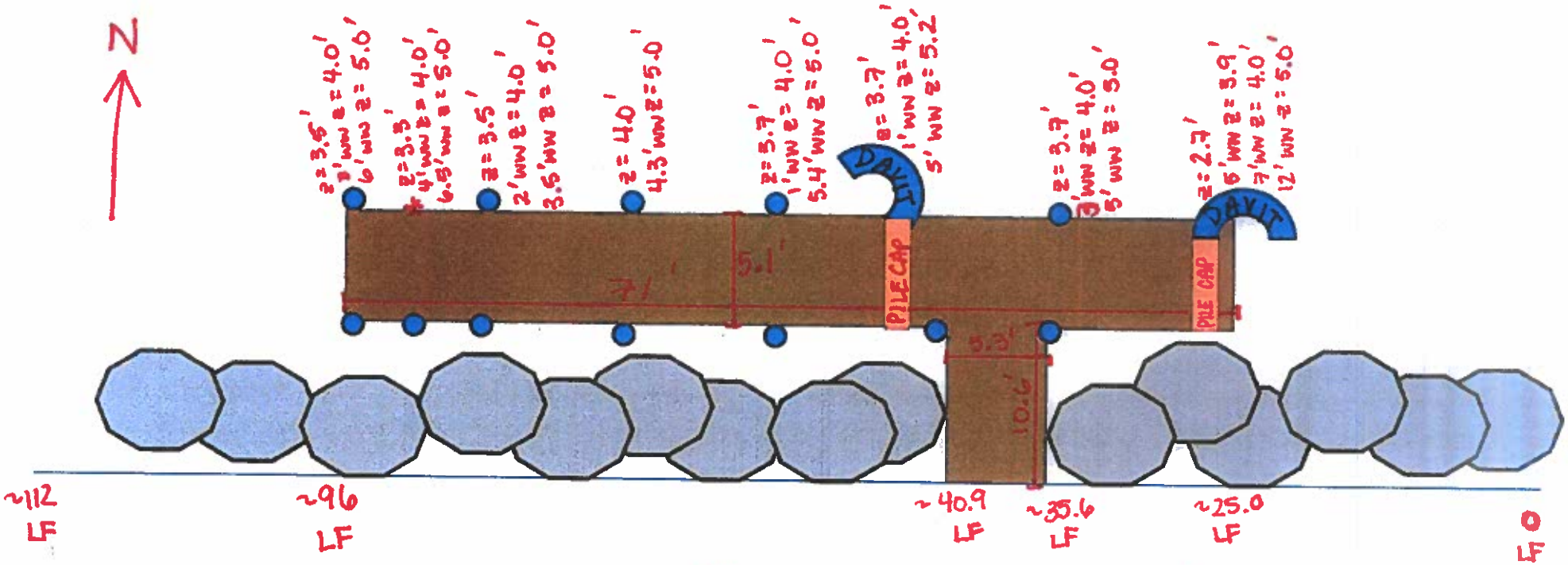

MEASURED ON GIS DUE TO SITE CONDITIONS

December 5, 2018 at 11:41am and December 11, 2018 at 10:35am

Inspectors Visit 2: L. Barrelli, F. Alvarez, L. Precht, D. Hamrick, S. Tiffany

146 Isla Dorada Boulevard

SKETCH OF BOUNDARY SURVEY

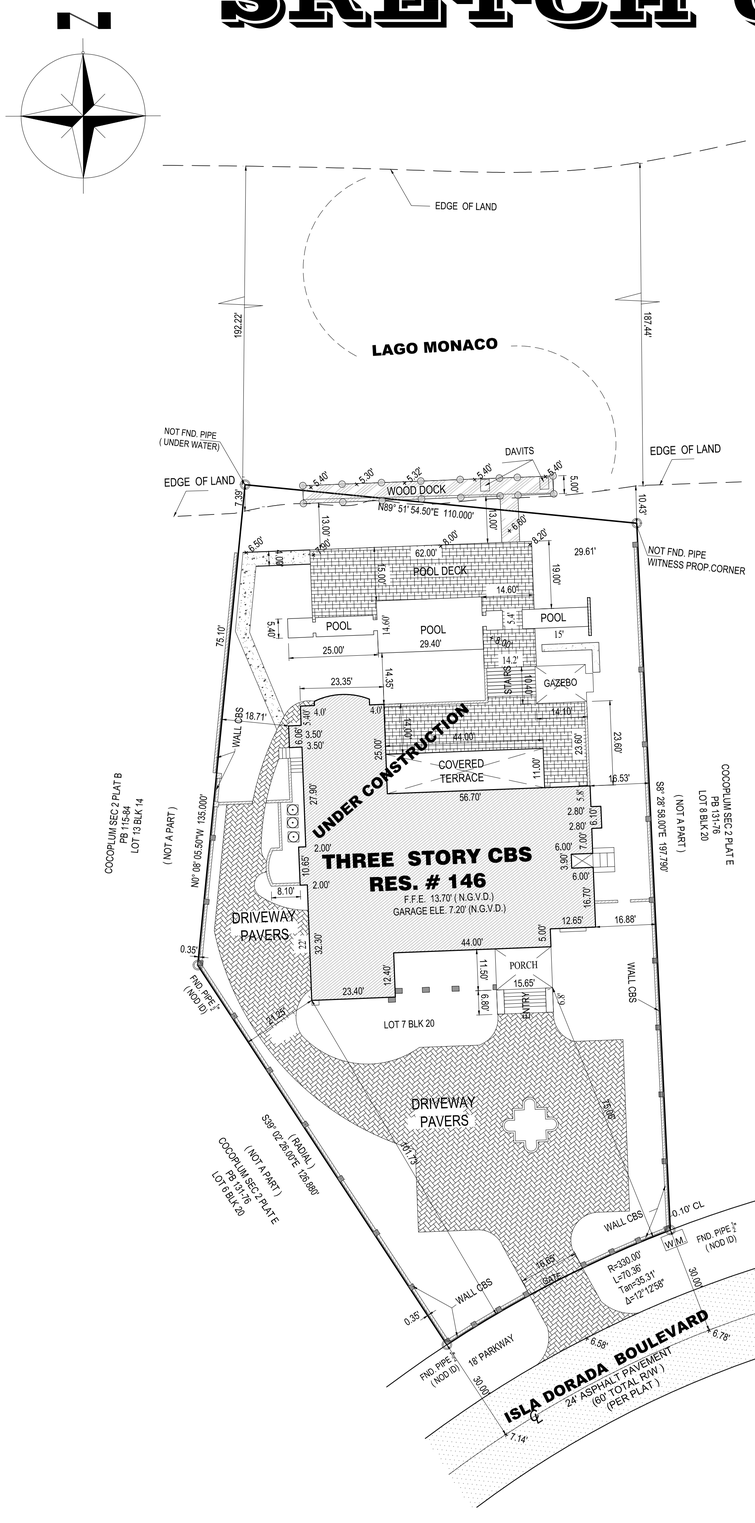

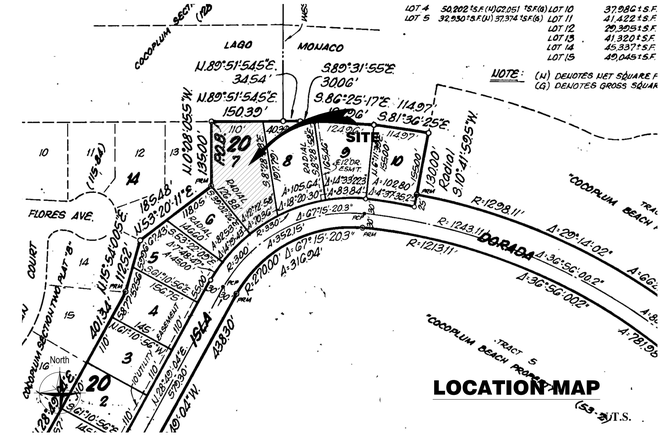

ADDRESS: 146 ISLA DORADA BLVD, CORAL GABLES, FLORIDA 33143
SECS 32-33, TOWNSHIP 55 S, RANGE 44 E, MIAMI DADE, FLORIDA

THE HEREIN CAPTIONED PROPERTY WAS SURVEYED AND DESCRIBED BASED ON THE SHOWN LEGAL DESCRIPTION: PROVIDED BY CLIENT.

ACCURACY:
THE EXPECTED USE OF THE LAND, AS CLASSIFIED IN THE MINIMUM TECHNICAL STANDARDS PURSUANT RULE 5J-17THE MINIMUM RELATIVE DISTANCE ACCURACY FOR THIS TYPE OF BOUNDARY SURVEY IS 1 FOOT IN 10,000 FEET. THE ACCURACY OBTAINED BY MEASUREMENT AND CALCULATION OF A CLOSED GEOMETRIC FIGURE WAS FOUND TO EXCEED THIS REQUIREMENT.

NOT VALID WITHOUT THE SIGNATURE AND THE ORIGINAL RAISED SEAL OF A FLORIDA LICENSED SURVEYOR AND MAPPER. ADDITIONS OR DELETIONS TO SURVEY MAPS OR REPORTS BY OTHER THAN THE SIGNING PARTY OR PARTIES IS PROHIBITED WITHOUT WRITTEN CONSENT OF THE SIGNING PARTY OR PARTIES.

CONTACT THE APPROPRIATE AUTHORITY PRIOR TO ANY DESIGN WORK ON THE HEREIN DESCRIBED PARCEL FOR BUILDING AND ZONING INFORMATION.

UNDERGROUND UTILITIES ARE NOT DEPICTED HEREON, CONTACT THE APPROPRIATE AUTHORITY PRIOR TO ANY DESIGN WORK OR CONSTRUCTION ON THE PROPERTY HEREIN DESCRIBED. SURVEYOR SHALL BE NOTIFIED AS TO ANY DEVIATION FROM UTILITIES SHOWN HEREON.

N M R

PROPOSED USE: RESIDENTIAL

R ND R R

NORTH ARROW DIRECTION AND BEARINGS SHOWN HEREON ARE BASED ON: ASSUMED VALUE OF ALONG THE CENTERLINE OF " ISLA DORADA BOULEVARD "

UNLESS OTHERWISE NOTED, THIS FIRM HAS NOT ATTEMPTED TO LOCATE FOOTINGS AND/OR FOUNDATIONS (UNDERGROUND).

THE U.S. DEPARTMENT OF FEDERAL EMERGENCY MANAGEMENT AGENCY, DELINEATES THE HEREIN DESCRIBED LAND TO BE SITUATED WITHIN

COMMUNITY NUMBER	PANEL NUMBER	SUFFIX	DATE OF FIRM INDEX	FIRM ZONE	BASE FLOOD ELEV.
120639	0459	L	09-11-2009	AE	11.0'

SOURCE ELEVATION PROVIDED BY MIAMI-DADE COUNTY SURVEY DEPARMENT

RELATIVE TO MEAN SEA LEVEL NATIONAL GEODETIC VERTICAL DATUM OF 1929
LOCATOR INDEX ; BENCHMARK USED; ELEVATION: (NGVD)

LEGAL DESCRIPTION:
LOT 7, IN BLOCK 20, OF COCOPLOM SECTION TWO PLAT E, ACCORDING TO THE PLAT THEREOF AS RECORDED IN PLAT BOOK 131, PAGE 76, OF THE PUBLIC RECORDS MIAMI DADE COUNTY, FLORIDA

Folio: 03-4132-030-0070

CONTACT PERSON INFORMATION
Name: Roberto R. Brizuela, P.S.M.
Telephone Number: (305) 551-4393
Fax Number: (305) 266-6112
E-mail: Rbrizuela@aol.com

SURVEYOR'S CERTIFICATE:

I HEREBY CERTIFY TO THE BEST OF MY KNOWLEDGE AND BELIEF THAT THIS DRAWING IS A TRUE AND CORRECT REPRESENTATION OF THE BOUNDARY SURVEY OF THE REAL PROPERTY DESCRIBED HEREON.

I FURTHER CERTIFY THAT THIS SURVEY WAS PREPARED IN ACCORDANCE WITH THE APPLICABLE PROVISIONS OF RULE 5J-17, FLORIDA ADMINISTRATIVE CODE, PURSUANT TO CHAPTER 472.027 OF THE FLORIDA STATUTES.

ROBERTO BRIZUELA & ASSOCIATES, INC.

ROBERTO R. BRIZUELA, P.S.M.
R.D.

LEGEND & ABBREVIATIONS

SYMBOL	DEFINITION	ABBREVIATION	SYMBOL	DEFINITION	ABBREVIATION	SYMBOL	DEFINITION	ABBREVIATION	SYMBOL	DEFINITION
	A/C CONDITIONING UNIT	C/M		GAS METER	+/-		PARKING METER	SEC.		SECTION
	BUILDING	C/V		GAS VALVE	P.C.		POINT OF CURVATURE	SQ.FT.		SQUARE FOOTAGE
	BENCH MARK	C/V		GUY ANCHOR	P.C.P.		PERMANENT CONTROL POINT	STY.		STORY
	BELL SOUTH ELECTRONIC BOX	E		IRON PIPE/ROD	P.C.C.		POINT OF COMPOUND CURVATURE	W.V.		WATER VALVE
	ATT MANHOLE	IF		IRON FENCE	P.A.N.		PARKER KALON NAIL	S.R.		STATE ROAD
	CABLE TV MANHOLE	IP		CHAIN LINK FENCE	P.B.		PLAT BOOK	S.R.(SR)		STATE ROAD (SR 27)
	CONCRETE BOX	FPL MH		FLORIDA POWER & LIGHT MANHOLE	P.O.B.		POINT OF BEGINNING	TEL		TELEPHONE
	CATCH BASIN	L.A.R/W		LIMITED ACCESS RIGHT-OF-WAY	P.O.C.		POINT OF COMMENCEMENT		TELEPHONE/PAD/POWER POLE	
	CONCRETE LIGHT POLE	L.A.		LIGHT POLE	P.R.C.		POINT OF REVERSE CURVATURE		TELEVISION BOX	
	CONCRETE POWER POLE	LP.		MAILBOX	P.R.M.		PERMANENT REFERENCE MONUMENT		UTILITY EASEMENT	
	CONCRETE	MH.		MANHOLE	(R)		PLAT MEASUREMENT		WATER MAIN LINE	
	CONCRETE PAVING	W.L.		MONUMENT LINE	(R)		RECORD	WELL		WELL
	CENTERLINE	"L"		NAIL & DISC	SW		SIDEWALK	MF		MIDDLE FINISH
	ELECTRICAL TRANSFORMER	N & D		OVER HEAD WIRE LINE	S.R.		RIGHT-OF-WAY	WP		WOOD STAKE/PIPE
	EXISTING ELEVATION	O.R.B.		OFFICIAL RECORD BOOK			MANHOLE DRAINAGE	WV		WATER VALVE
	PER ETS/KAT	P.B.		PLAT BOOK			SIDEWALK/VALVE	W		WIDTH

BOUNDARY SURVEY

ADDRESS: 146 ISLA DORADA BLVD, CORAL GABLES, FLORIDA 33143
Folio: 03-4132-030-0070

	REVISIONS	DATE
1		
2		
3		

ROBERTO BRIZUELA & ASSOCIATES, INC.
7315 WEST FLAGLER STREET, MIAMI, FL. 33144
PHONE:(305) 551-4393 - FAX: (305) 266-6112

Date: 08-22-2018
Scale: AS NOTED
Drawn:
Job: 18-06-77-A

Sheet 1 of Sheets 1

DOCKS BEYOND CITY ALLOWANCE	
SUBJECT PROPERTY (S.P): 146 Isla Dorada Blvd	
PROPERTY	ESTIMATED DISTANCE FROM PROPERTY LINE TO OUTER MOST EDGE OF DOCK
WEST OF S.P	
3) 16900 Mira Flores Ave	35 FEET
4) 6930 Mira Flores Ave	24 FEET
5) 6950 Mira Flores Ave	25 FEET
S.P: 146 Isla Dorada Blvd	DOCK- 23 FEET / BOATLIFT- 43 FEET
EAST OF S.P	
1) 144 Isla Dorada Blvd	30 FEET
2) 142 Isla Dorada Blvd	27 FEET

CLIENT:
Mr. Luis Alfonso Rodriguez

146 Isal Dorada Boulevard
Coral Gables, Florida 33156

ENVIRONMENTAL CONSULTANT:
OCEAN CONSULTING, LLC
340 Minorca Avenue, Suite 7
Coral Gables, Florida 33134
T: (305) 921-9344 F: (305) 677-3254

146 ISLA DORADA BLVD

NEIGHBORING DOCK EXTENSIONS

PROPERTY AERIAL

SCALE : 1" = 64'

Issue #	Issue Date
1	April 2, 2019

PROJECT: 18-8490

ocean CONSULTING, LLC

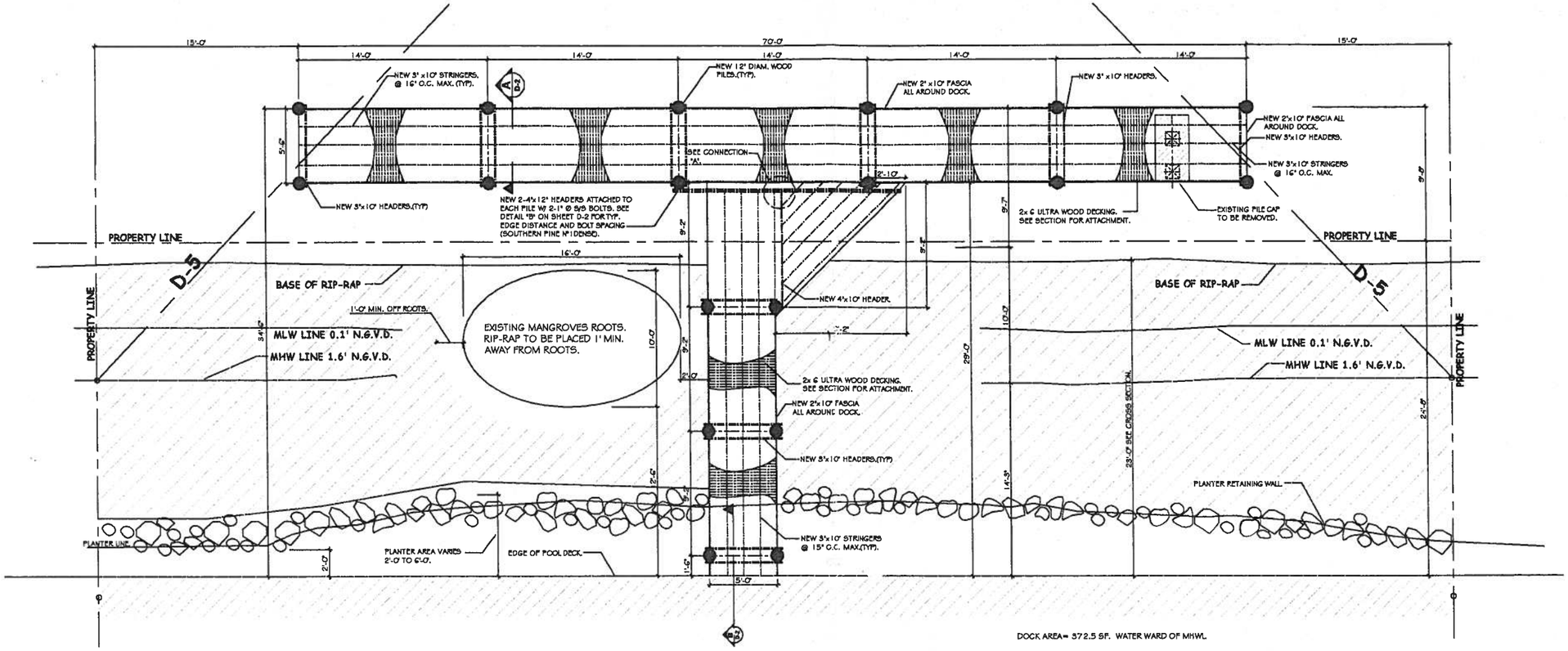

DOCK PLAN. (SCALE: 1/4" = 1'-0").

DOCK AREA= 372.5 SF. WATER WARD OF MHWL

LEGEND:
RIP-RAP TO BE PLACED, SEE SECTION ON SHEET D-2.

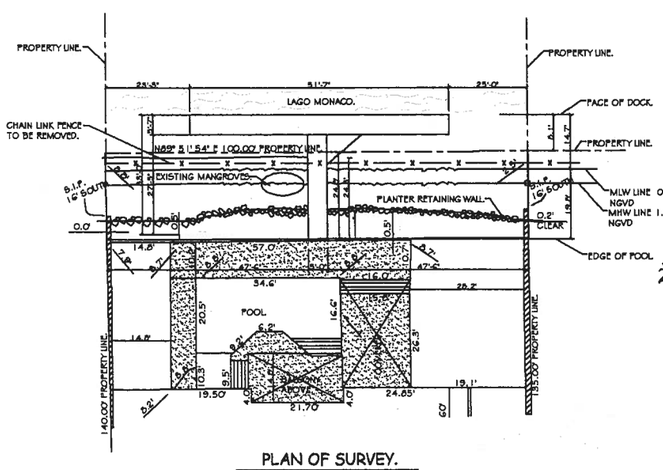

PLAN OF SURVEY.
SCALE: 1/10" = 1'-0"

LOCATION PLAN
SCALE: N.T.S.

N

DERM COASTAL SECTION
PRELIMINARY APPROVAL
NAME Molly A. Messer
DATE 5/16/03
*FOR LETTER OF NO OBJECTION

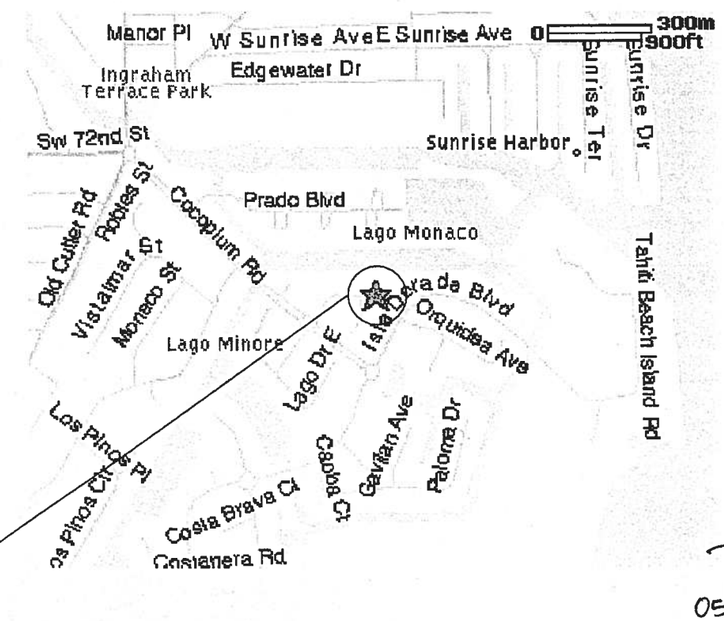

05/16/03
Denis K. Soiano
P.E. 56902
S.I. 2046

BUNNELL FOUNDATION, IN
marine engineering & foundation contractors
Caissons - docks - seawalls - piling - cofferdams - bridges
305-653-3369 (o)
305-653-3391 (f)
3033 n.w. no river dr.
miami, florida 33142
bunnellfdocks@aol.com

CONSULTANTS:
Solver Structural Partnership, Inc.
7800 N.W. 25th ST.
Miami, Florida 33122
Phone: (305) 591-3447
Fax: (305) 591-3447
E-Mail: solverstruct@cs.com
DESIGN - INSPECTION - INVESTIGATION - REPORTS

job name: DUEÑAS RESIDENCE.
located at: 6900 MIRA FLORES AVE. CORAL GABLES. FL. 33143.
title: WOOD DECKINGS.

date	03/27/03
issued	
drawn	I.LOPEZ
checked	D.K.S.
project no.	2003-092
revisions:	

sheet no.
D-1
1 of 3

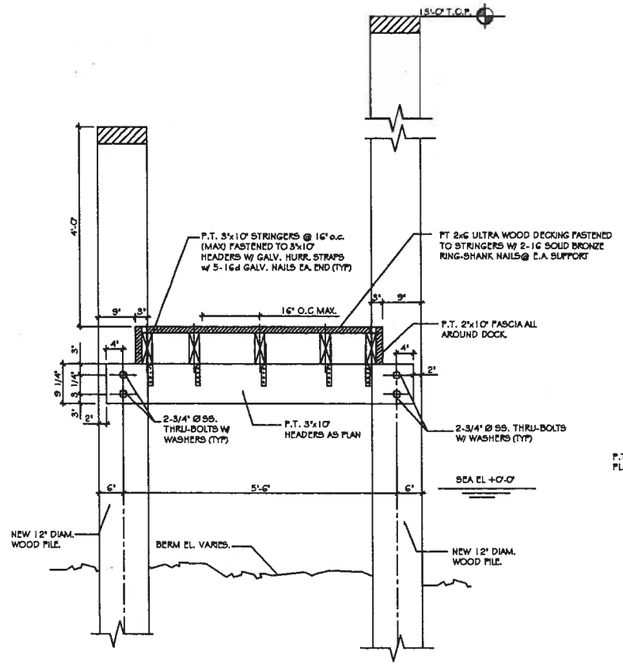

TYP. SECTION (A / D-2)
SCALE: 3/4" = 1'-0"

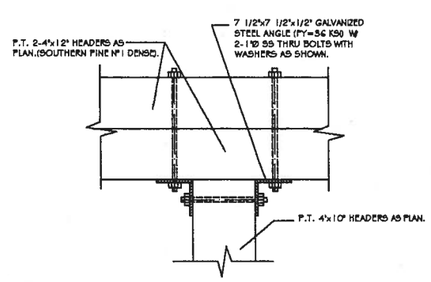

DETAIL FOR CONNECTION A.
SCALE: 1" = 1'-0"

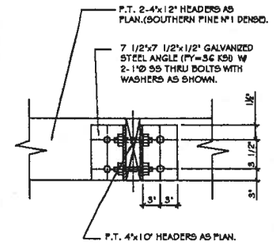

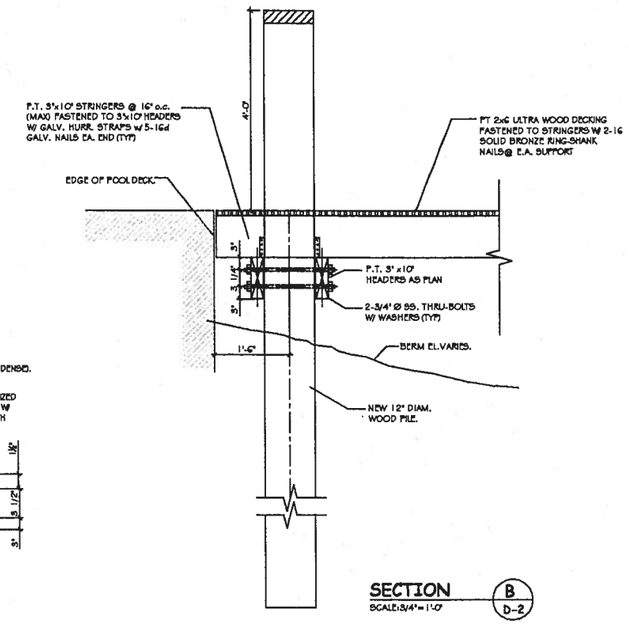

SECTION (B / D-2)
SCALE: 3/4" = 1'-0"

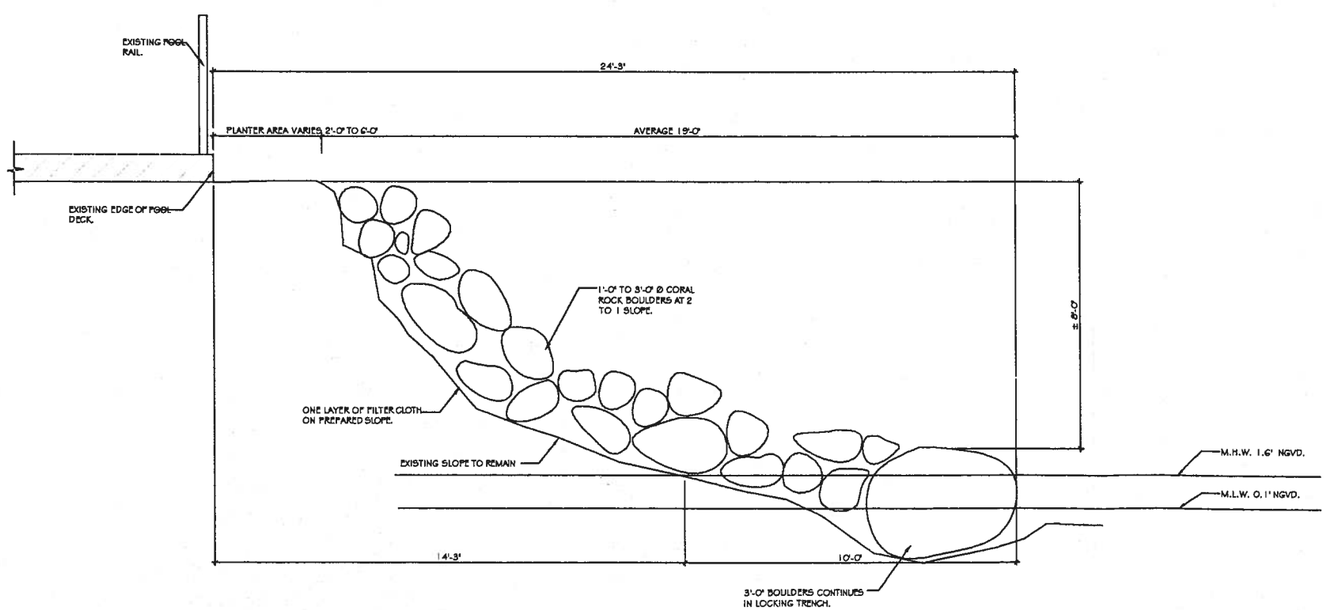

SECTION THRU BOULDER RIP-RAP.
SCALE: ½" = 1'-0").

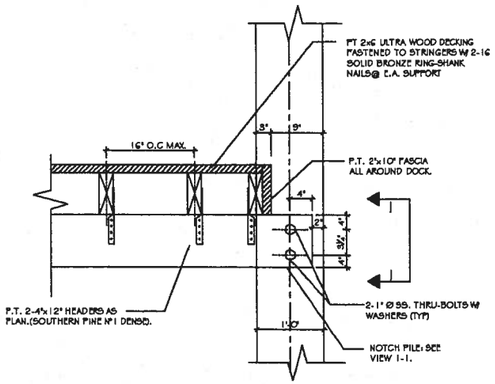

DETAIL "B"
SCALE: 1" = 1'-0"

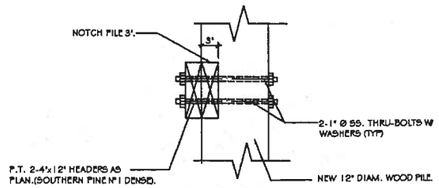

VIEW 1-1
SCALE: 1" = 1'-0"

05/16/03
Denis K. Solano
P.E. 56902
S.I. 2046

BUNNELL FOUNDATION, IN
marine engineering & foundation contractors
Cassions - docks - seawalls - piling - catwalks - bridges
305-633-3369 (o)
305-633-3391 (f)
3053 n.w. 110 street
miami, florida 33147
bunnelldock@aol.com

CONSULTANTS:
Solver Structural Partnership, Inc.
7500 N.W. 25th ST.
Miami, Florida 33122
Phone: (305) 591-3341
Fax: (305) 591-3447
E-Mail: solverstruc@aol.com
DESIGN - INSPECTION - INVESTIGATION - REPORTS

job name: DUEÑAS RESIDENCE.
located at: 6900 MIRA FLORES AVE. CORAL GABLES. FL. 33143.
title: WOOD DECKINGS.

date 03/27/03
issued
drawn I.LOPEZ
checked D.K.S.
project no. 2003-092
revisions:

sheet no. D-2
2 of 3

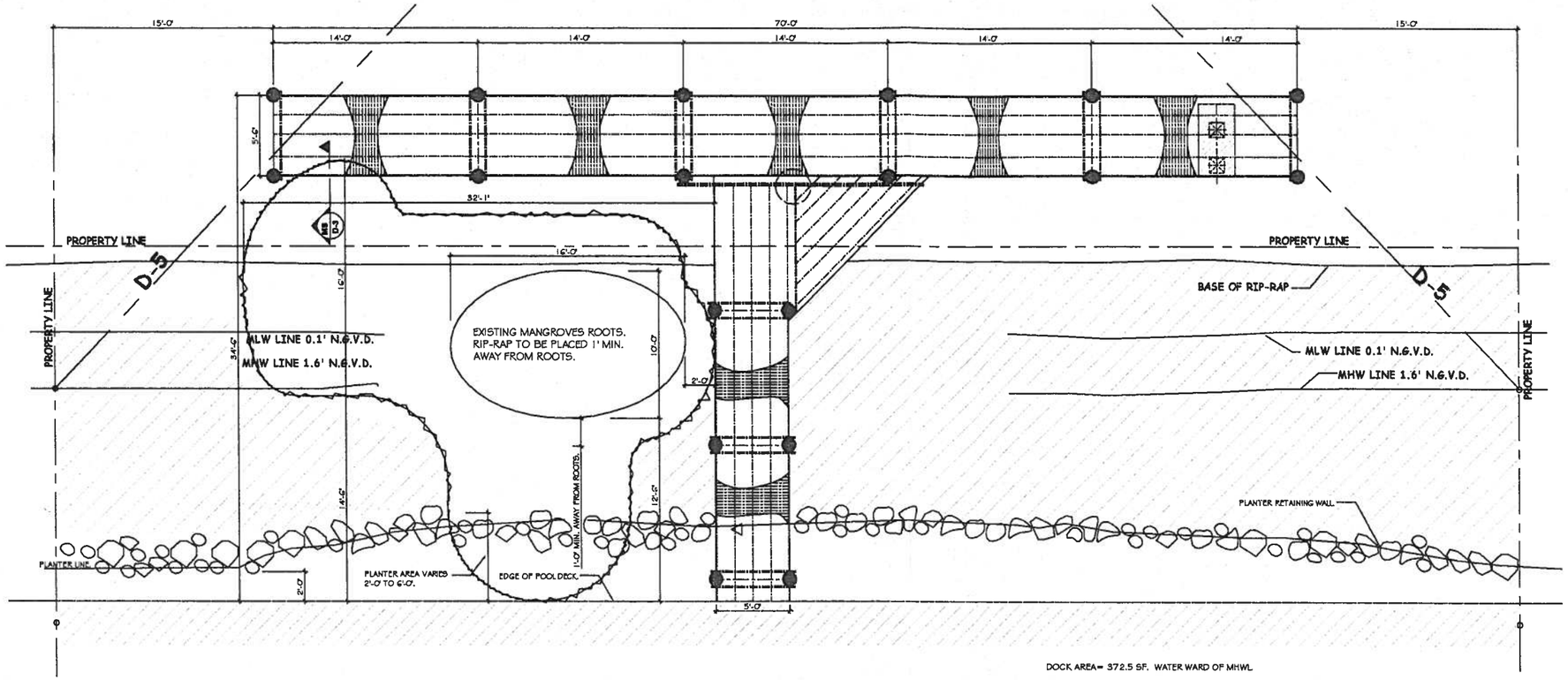

DOCK AREA= 372.5 SF. WATER WARD OF MHWL

MANGROVES PLAN (SCALE: 1/4" = 1'-0").

LEGEND:

RIP-RAP TO BE PLACED. SEE SECTION ON SHEET D-2.

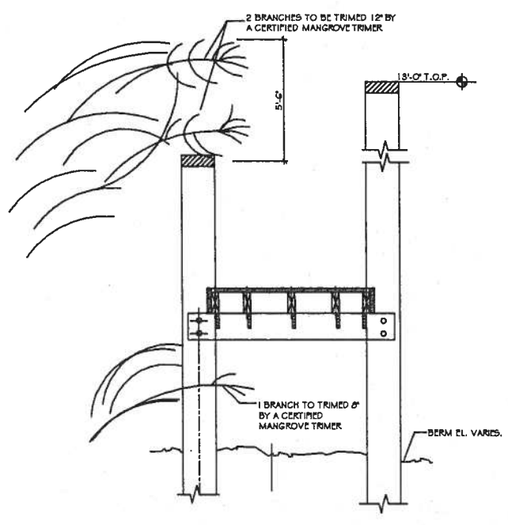

MANGROVES SECTION

SCALE: 1/2" = 1'-0"

GENERAL

ELEVATIONS SHOWN REFER TO THE NATIONAL GEODETIC VERTICAL DATUM (NGVD) OF 1929.
ALL DIMENSIONS ON PLANS ARE SUBJECT TO VERIFICATION IN THE FIELD.
IT IS THE INTENT OF THESE PLANS TO BE IN ACCORDANCE WITH APPLICABLE CODES AND AUTHORITIES HAVING JURISDICTION ANY DISCREPANCIES BETWEEN THESE PLANS AND APPLICABLE CODES SHALL BE IMMEDIATELY BROUGHT TO THE ATTENTION OF ENGINEER BEFORE PROCEEDING WITH WORK.

IT IS THE INTENT OF THESE PLANS AND THE RESPONSIBILITY OF THE CONTRACTOR TO COMPLY WITH LOCAL, STATE AND FEDERAL ENVIRONMENTAL PERMITS ISSUED FOR THIS PROJECT IT SHALL BE THE CONTRACTORS RESPONSIBILITY TO FAMILIARIZE AND GOVERN HIMSELF BY ALL PROVISIONS AF THESE PERMITS.

APPLICABLE BUILDING CODE: FLORIDA BUILDING CODE, 2001 EDITION.

DESIGN LOADS

1. DOCK LL 60 PSF

STEEL

1. ALL BOLTS SHALL BE TYPE 316 STAINLESS STEEL

WOOD

1. PRIMARY WOOD FRAMING MEMBERS SHALL BE NO. 2 PRESSURE TREATED SOUTHERN PINE OR BETTER. (FB= 1050 PSI MINIMUM).EXCEPT THE 2-4x12' GIRDER THAT SHALL BE 1 SOUTHERN PINE Nº1 DENSE.
2. ALL DIMENSIONS ON PLANS ARE SUBJECT TO VERIFICATON IN THE FIELD.
3. IT IS THE INTENT OF THESE PLANS TO BE IN ACCORDANCE WITH APPLICABLE CODES AND AUTHORITIES HAVING JURISDICTION. ANY DISCREPANCIES BETWEEN THESE PLANS AND APPLICABLE CODES SHALL BE IMMEDIATELY BROUGHT TO ATTENTION OF THE ENGINEER BEFORE PROCEEDING WITH WORK.
4. IT IS THE INTENT OF THESE PLANS AND THE REPONSABILITY OF THE CONTRACTOR TO COMPLY WITH LOCAL, STATE AND FEDERAL ENVIROMENTAL PERMITS ISSUED FOR THIS PROYECT. IT SHALL BE THE CONTRACTORS RESPONSABILITY TO FAMILIARIZE AND GOVERN HIMSELF BY ALL PROVISIONS OF THESE PERMITS.
5. APPLICABLE BUILDING CODE: FLORIDA BUILDING CODE, 2001 EDITION.

WOOD PILING

1. WOOD DOCK PILES SHALL BE 12" DIAM. PILES WITH 15 TONS MIN. BEARING CAPACITY DRIVEN TO A MINIMUM BEARING CAPACITY OF 15 TONS WITH 12' MIN. PENETRATION INTO FIRM MATERIAL BELOW SILT LAYER.

05/16/03

Denis K. Solano
P.E. 56902
S.I. 2046

BUNNELL FOUNDATION, IN
305-633-3369 (o)
305-633-3391 (f)
marine engineering & foundation contractors
Caissons - docks - seawalls - piling - collections - bridge
3033 n.w. no river dr.
miami, florida 33142
bunnellfdocks@aol.com

CONSULTANTS:
Solver Structural Partnership, Inc.
7500 N.W. 25th ST.
Miami, Florida 33122
Phone:(305) 591-3341
Fax: (305) 591-3447
E-Mail: solverstruct@cs.com
DESIGN - INSPECTION - INVESTIGATION - REPORTS

job name: DUEÑAS RESIDENCE.
located at: 6900 MIRA FLORES AVE. CORAL GABLES. FL. 33143.
title: WOOD DECKINGS.

date 03/27/03
issued
drawn I.LOPEZ
checked D.K.S.
project no. 2003-092
revisions:

sheet no.
D-3
3 of 3

THE CITY OF CORAL GABLES

BUILDING AND ZONING
DEPARTMENT

THE CITY BEAUTIFUL

CITY HALL 405 BILTMORE WAY
CORAL GABLES, FLORIDA 33134

October 8, 1991

RECEIVED
OCT 15 1991
WATER MANAGEMENT
DIVISION

Mr. Paul Guitierrez
7240 N. W. 12th Street
Miami, Florida 33126

Re: Lot 8, Block 20
Cocoplum Section Two
Application No. 7515-Z

Dear Mr. Guitierrez:

The Board of Adjustment, at its regular meeting held on Monday, October 7, 1991, passed and adopted Resolution No. 3138-ZB approving the following variance for captioned, subject to the proposed dock being constructed to meet all of the conditions and restrictions stipulated by the City of Coral Gables Public Works Department and the Dade County Department of Environmental Resources Management (DERM). All as outlined under the applicant's proposal as follows:

APPLICANT'S PROPOSAL: In connection with the proposed dock for the existing single-family residence located at the subject property, the Applicant requests the following variance from the provisions of Ordinance No. 1525, as amended and known as the "Zoning Code."

1. Grant a variance allowing the proposed dock to extend twenty-seven (27'0") feet outward from the bank/mean high water line of Lago Monaco vs. the proposed dock not extending outward from the bank/mean high water line of the waterway more than five (5'0") feet, as required by Section 17-1 (a) of the "Zoning Code."

All as shown on plans which have preliminary approval by the Board of Architects. Such approval is for architectural design only and is not an endorsement of any variance(s) being requested by the Applicant.

Any variance authorized by Resolution by the Board of Adjustment shall become void and of no effect six (6) months from and after the date of the resolution granting the variance, unless within such period of six (6) months a building permit for the building or structure involved embodying the substantive matters for which the variance was granted shall have been issued and taken out; or if the use or adoption of such variance does not require the issuance of a building permit, unless the request action permitted by the variance shall have taken place within the said six (6) month period. Whenever the six (6) month period has elapsed without action by the applicant, he shall be required to file a new application as set forth in Section 26-8 of Ordinance No. 1525, as amended and known as the "Zoning Code."

However, upon application, the City Manager may, after review and determination that substantive progress has been achieved by the applicant in terms of project planning, extend the expiration date of the variance for an additional period of time not to exceed six (6) months. The said extension request shall be filed with the City Manager two (2) weeks prior to the expiration of the initial six (6) month effective date of the variance.

Please refer to the attached sheet regarding decisions of the Board of Adjustment, appeal from a decision of the Board of Adjustment, and appeal from the decision of the City Commission.

NOTE: No permit can be issued on the application which was approved by the aforementioned resolution, passed and adopted by the Board of Adjustment, during the first 14 days after the Board of Adjustment meeting.

If you desire further information, please do not hesitate to contact this office.

Very truly yours,

THE CITY OF CORAL GABLES
BOARD OF ADJUSTMENT

Dennis S. Smith
Secretary

DSS:lcq
Attachment

P.S. PLEASE NOTE THAT A PERMIT MUST BE TAKEN OUT WITHIN SIX MONTHS OF DATE OF VARIANCE APPROVAL OR IT WILL BECOME VOID.

144 Dock Variance Approval 1991

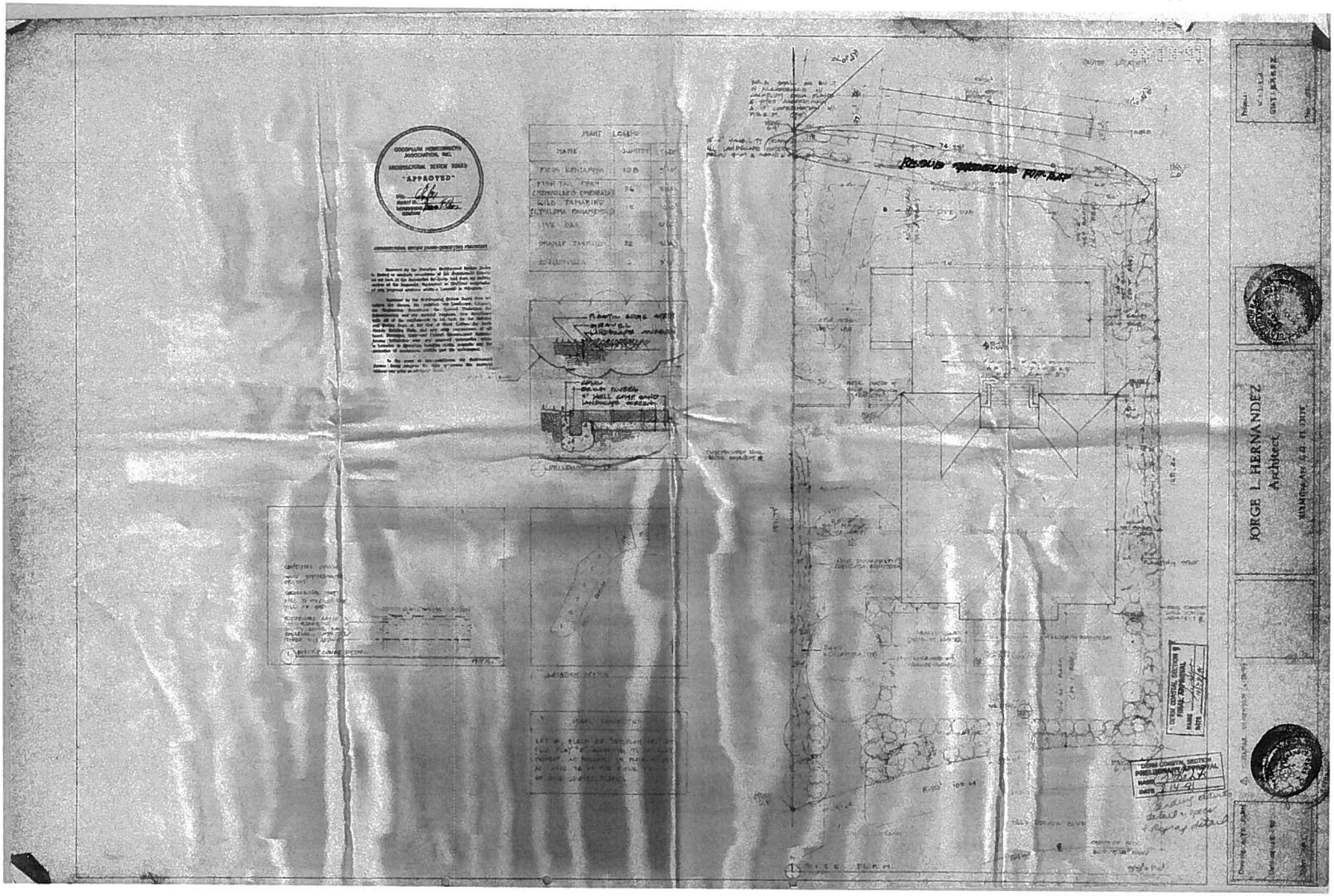

144 Dock Variance Approval 1991

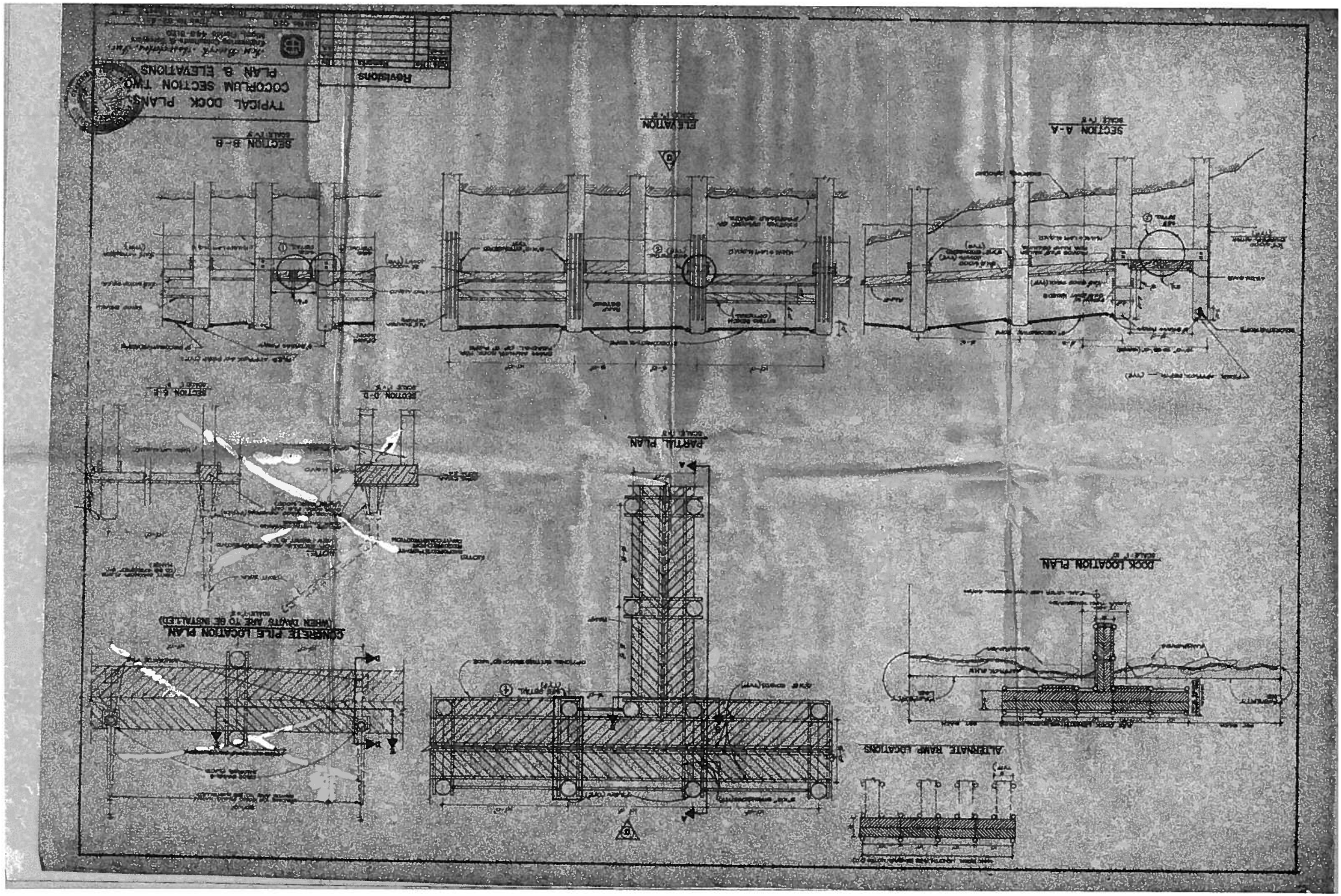

COCOPLUM SECTION TWO
TYPICAL DOCK PLANS

PLANS SHOWN APPLY TO THE FOLLOWING LOTS:

a. LOTS 1 THRU 9 INCLUSIVE, BLOCK 12, COCOPLUM SECTION TWO, PLATS "A", P.B. 116, PG. 2

b. LOTS 1, 2 AND 5 THRU 15 INCLUSIVE, BLOCK 14, LOTS 15 THRU 26 INCLUSIVE AND THE SOUTHWESTERLY PORTION OF LOT 27, BLOCK 13, COCOPLUM SECTION TWO PLAT "B" P.B. 116, PG. 64.

c. LOT 9 BLOCK 10, SOUTH 60' OF LOT 8; LOTS 4 THRU 23, INCLUSIVE AND THE SOUTHEASTERLY PORTION OF LOT 24, THE NORTHEASTERLY PORTION OF LOT 25, LOT 26, LOTS 32 THRU 39 INCLUSIVE, LOT 43, THE SOUTHWESTERLY PORTION OF LOT 44, AND LOTS 46 THRU 53 INCLUSIVE, BLOCK 16, COCOPLUM SECTION TWO PLAT "C" P.B. 97, PG. 58.

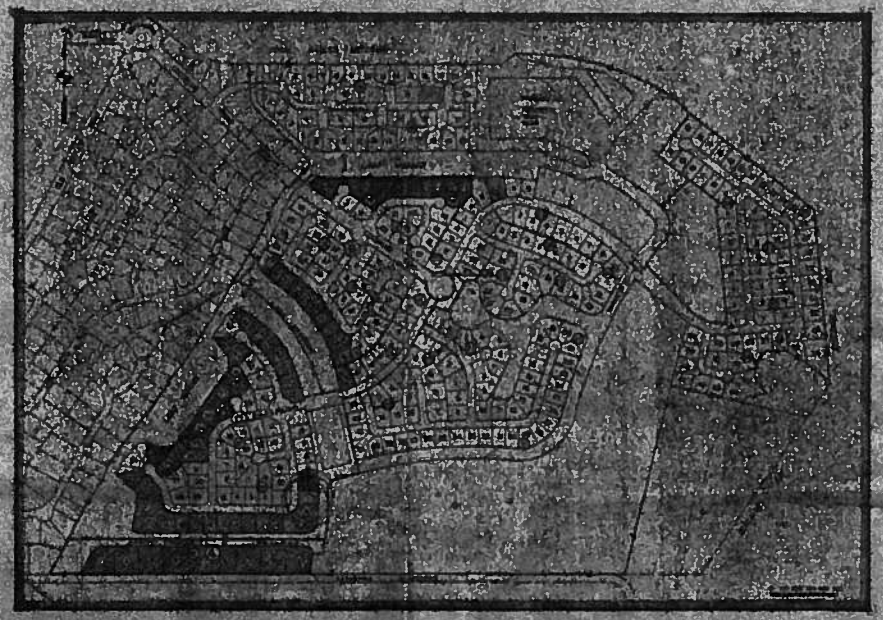

LEGEND ⊡ APPLICABLE LOTS

LOCATION MAP

INDEX OF SHEETS

Revisions

TITLE SHEET

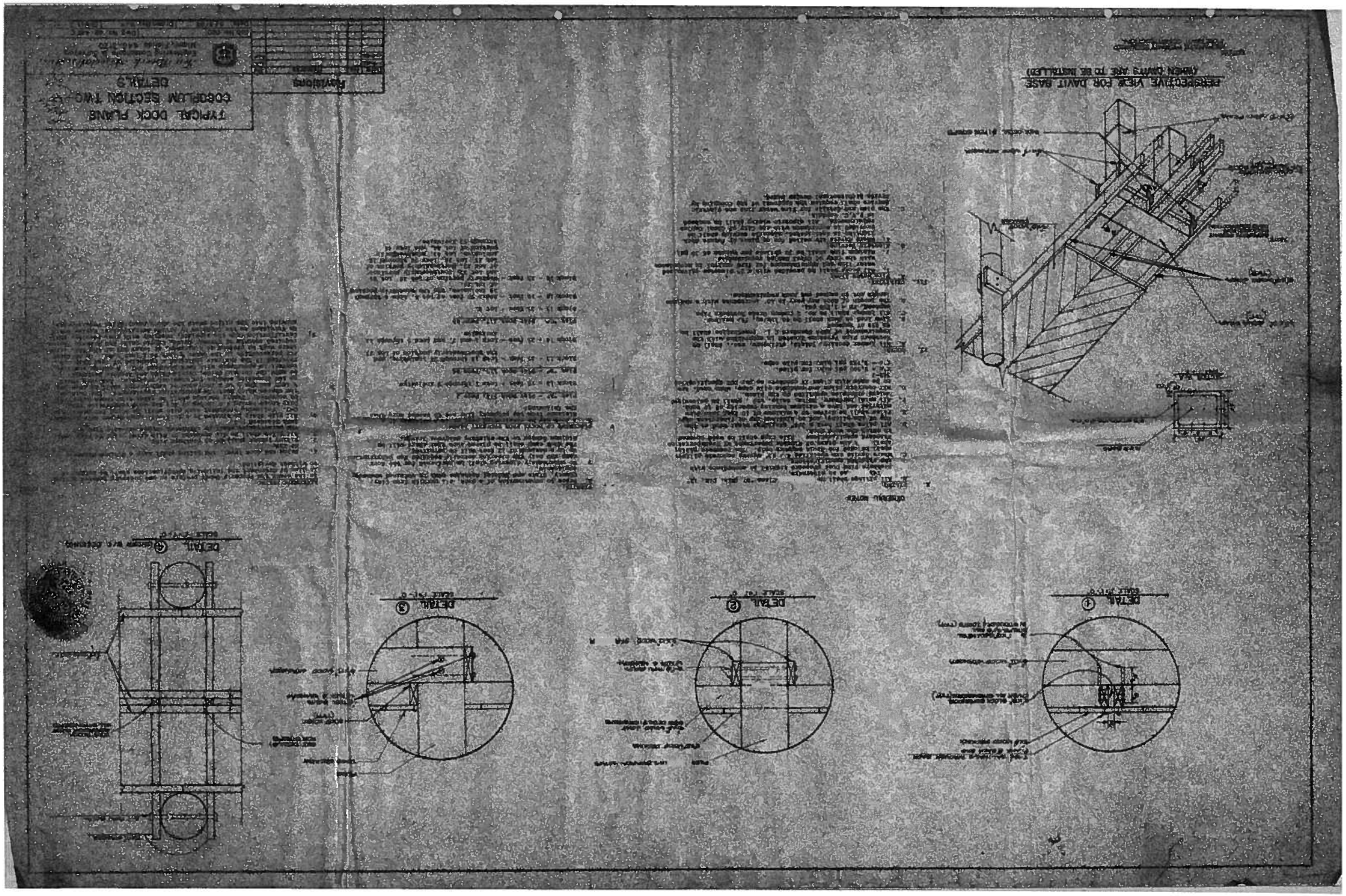
TYPICAL DOCK PLANS
COROPLUM SECTION TWO
DETAIL 3
REVISIONS
PERSPECTIVE VIEW FOR DAVIT BASE
(WHEN DAVITS ARE TO BE INSTALLED)
DETAIL ①
SCALE 1/4"=1'-0"
DETAIL ②
SCALE 1/4"=1'-0"
DETAIL ③
SCALE 1/4"=1'-0"
DETAIL ④
SCALE 1/4"=1'-0"

144 Isla Dorada Blvd Dock Plans 1990

P/2196 .0.0
DOCK + DAVITS 10:01:8+
(VARIANCE)

91/06629

CITY OF CORAL GABLES
NO DEVELOPMENT

PUBLIC WORKS

BUILDING OFFICIAL

1. Subject to compliance with all Federal, State, County and City rules and regulations. City inspectors do not [illegible] major results

subject to DERM approval

APPLICATION NUMBER 7515
BOARD OF ADJUSTMENT
HEARING DATE 10-7-91

ZONING APPROVAL
This plan requires the approval of the Zoning Code of the City of Coral Gables.

1. Grant a variance allowing the proposed dock to extend twenty-seven (27'0") feet outward from the bulkhead line of the water line of high tide, i.e., the proposed dock will extending outward from the bulkhead line of the waterway more than five (5'0") feet, as required by Section [illegible] of the "Zoning Code."

Approved [illegible] 10/3/91 [illegible] 9/21/92
Unless a permit is taken out within [illegible] 9/21/92
The right granted [illegible] is revoked or stayed.
10/04/91

144 Dock Variance Approval 1991

METROPOLITAN DADE COUNTY
DEPARTMENT OF ENVIRONMENTAL RESOURCES MANAGEMENT
WATER MANAGEMENT DIVISION

AGREEMENT

FOR

CLASS I COASTAL CONSTRUCTION PERMIT

GUTIERREZ DOCK AND DAVITS

Suite No. 1310
Metro-Dade Center
111 N.W. First Street
Miami, Florida 33128
375-3312

PERMIT NO. CC91-161

DATE ISSUED: 10/28/91 EXPIRATION DATE: 10/28/93

004398

AGREEMENT FOR COASTAL CONSTRUCTION
DADE COUNTY DEPARTMENT OF ENVIRONMENTAL RESOURCES MANAGEMENT
(DERM)
WATER MANAGEMENT DIVISION

This agreement, between the Permittee and Contractor named herein and Dade County DERM, is made for the purpose of accomplishing the work described herein as further described by approved drawings.

1. Proposed work, construction, or use:

Construction of an "L-shaped" timber dock with a 22 foot by 5 foot walkway, as measured from the mean high water line, and a terminal platform which measures 63 feet in length by 5 feet in width. Boat davits are to be installed on the northeast end of the dock. All work shall be performed in accordance with the plans entitled "Villa Gutierrez"; prepared by Oscar Jose Corral, P.E.; signed and sealed on June 5, 1991; approved by this Department and in accordance with the conditions on sheets 2A and 2B.

2. Location:

144 Isla Dorada Blvd.
Coral Gables, Florida 33143

Waterway:

Lago Monaco

3. Name, Address and Phone of Permittee:

Raul Gutierrez Jr.
270 Cypress Drive
Key Biscayne, Florida 33122
(305) 361-8336

Contractor: (Must be Licensed by Dade County)

Shoreline Foundation Incorporated
P.O. Box 69-4215
Miami, Florida 33269
(305) 624-9770

4. DERM Project Manager:

Pam Gastesi

SPECIFIC CONDITIONS

1. DERM shall be notified a minimum of forty-eight (48) hours prior to the commencement of this project (305) 375-3312, unless otherwise noted.

2. The permittee and contractor shall ensure that turbidity levels are monitored as necessary and/or at the request of DERM. If turbidity exceeds fifty (50) Jackson Candle Units (J.C.U.'s) beyond a fifty (50) foot radius of the project area, which would be in violation of Section 24-11 of the Metro Dade County Code, turbidity controls, such as (but not limited to) turbidity curtains, shall be implemented within the project area and DERM shall be notified immediately. If turbidity levels do not drop below fifty (50) J.C.U.'s within one (1) hour after implementation of the controls, all operations shall be halted. Turbidity samples shall be collected at the points, times and frequencies specified by DERM. Samples shall be analyzed by a state certified water quality laboratory and the results sent directly to the DERM Project Manager on a weekly basis. This project shall not be resumed until the contractor has implemented sufficient turbidity control methods and has received authorization from DERM.

3. The contractor shall instruct all personnel associated with this project of the potential presence of manatees and the need to avoid collision with manatees. All vessels associated with the project must operate at "No Wake/Idle Speed" at all times while in water where the draft of the vessel provides less than a four foot clearance from the bottom. Additionally, all vessels will follow routes of deep water whenever possible. All project operations in open water shall cease upon the sighting of a manatee(s) within one hundred (100) yards of the project area and will not resume until the manatee(s) has departed the project area. Any collision with and/or injury to a manatee shall be reported immediately to the "Manatee Hotline" (1-800-DIAL-FMP), the U.S. Fish and Wildlife Service's, Jacksonville Field Office (904) 791-2580, and DERM (305) 375-3324.

SPECIFIC CONDITIONS (Continued)

4. The contractor shall take all necessary precautions to prevent debris from falling into the water. Any debris which does fall into the water shall be removed immediately.

5. Any deviation from the approved plans for this project shall be submitted to and approved by DERM prior to the commencement of this project.

6. A copy of this permit must be kept on-site during all phases of this project.

7. A $1,000.00 mangrove protection bond shall be held until the completion of this project to insure that the mangroves are not damaged. Any mangrove canopy that is trimmed or destroyed during this project shall be replaced with red mangrove seedlings (Rhizophora mangle) a minimum of two (2) feet in height and planted on one (1) foot centers within a replanting area that is twice the affected canopy area. The protection bond will be held a minimum of six (6) months after the seedlings have been planted, or until such time that this Department has determined that the seedlings will survive.

I HAVE READ ALL THE AFOREMENTIONED "SPECIFIC CONDITIONS" LISTED ABOVE ON SHEETS 2A AND 2B, AND FULLY UNDERSTAND THEM. I AGREE TO FULLY COMPLY WITH ALL CONDITIONS OF THIS PERMIT. I UNDERSTAND AND ACKNOWLEDGE THAT FAILURE TO COMPLY WITH ALL CONDITIONS OF THIS PERMIT MAY RESULT IN BOND FORFEITURE, PERMIT REVOCATION, FINES, AND/OR THE FILING OF AN ENFORCEMENT ACTION AGAINST ME BY DERM.

I HEREBY ACKNOWLEDGE THAT I AM FULLY RESPONSIBLE FOR THE IMPLEMENTATION OF ALL WORK AUTHORIZED UNDER THIS PERMIT AGREEMENT AND AGREE TO TAKE FULL RESPONSIBILITY FOR ENSURING ADHERENCE TO ALL CONDITIONS, LIMITATIONS AND RESTRICTIONS CONTAINED IN THIS PERMIT AGREEMENT. I FURTHER AGREE TO ASSUME FULL RESPONSIBILITY FOR THE ACTIONS OF ALL MY EMPLOYEES, AGENTS, PERSONS UNDER DIRECT OR INDIRECT CONTRACTUAL OBLIGATION TO ME WITH RESPECT TO THE WORK AUTHORIZED HEREIN. I FURTHER AGREE TO ENSURE THAT ALL SUCH EMPLOYEES, AGENTS, AND PERSONS SHALL ABIDE BY ALL CONDITIONS, LIMITATIONS AND RESTRICTIONS CONTAINED IN THIS PERMIT.

SIGNED: _____ DATE: 10/21/91
PERMITTEE

5. Approximate Costs:

Item	Estimated Cost	Bond Amount
Dock Davits and Riprap	$16,000.00	N/A
Mangrove Bond	N/A	$1,000.00

6. Total Amount of Performance Bond Required: $1,000.00

7. Pre-Work Conference:

At the discretion of the Director, a pre-work conference may be held prior to the commencement of any work under this Permit between the Permittee, the Contractor and Engineer, and representative(s) of DERM together with any property owners or other persons whose interests may be affected by the work.

8. As-Built Plans may be required by DERM within thirty (30) days of completion of the project.

9. Agencies other than DERM from which approval may be necessary (as checked):

___ South Florida Water Management District
___ Dade County Public Works Department for use of explosives
___ Dade County Building Department
___ U.S. Army Corps of Engineers
___ State of Florida Department of Environmental Regulation
X State of Florida Department of Natural Resources
X City of Coral Gables

Recommended: CKG
Coastal Program

IN WITNESS WHEREOF the said DADE COUNTY, FLORIDA has caused this Permit Agreement to be executed in its name by the Director of DERM and Contractor and Permittee have caused this Permit Agreement to be executed in their names.

WHEN THE CONTRACTOR IS AN INDIVIDUAL OR PARTNERSHIP

Witnesses	Contractor	
_____	_____	SIGN
_____	_____	DATE

WHEN THE CONTRACTOR IS A CORPORATION

Secretary

Shoreline Foundation, Inc.
(Correct Name of Corporation)

DATE 10/21/91

BY _____
President

(AFFIX CORPORATE SEAL)

WHEN THE PERMITTEE IS AN INDIVIDUAL

Witnesses	Owner	
Michael Betanzos	_____	SIGN
_____	10/21/91	DATE

WHEN THE PERMITTEE IS A CORPORATION

Secretary

(Correct Name of Corporation)

DATE _____

BY _____
President

(AFFIX CORPORATE SEAL)

DEPARTMENT OF ENVIRONMENTAL RESOURCES MANAGEMENT

Issued On: 10/28/91

By _____
Director or his Designee

THE ISSUANCE OF THIS PERMIT DOES NOT RELIEVE THE PERMITTEE AND/OR CONTRACTOR FROM OBTAINING ALL REQUIRED FEDERAL, STATE AND LOCAL PERMITS.