EXISTING TREE LIST

Tree #	Botanical Name	Common Name	D.B.H. (inches)	Ht. (Feet)	Spread (Feet)	T.P.Z. (inches)	Condition	Tree Disposition	Canopy Loss (Sq. Ft.)
1	Bursera Simaruba	Gumbo Limbo	42	45	46	336	Good	Relocate	0 - Relocate
2	Livistona Chinensis	Chinese Fan Palm - Triple	15	35/40	18	120	Good	Remove	255
3	Livistona Chinensis	Chinese Fan Palm - Double	15	40/30	18	120	Good	Remove	255
4	Ligustrum Japonica	Ligustrum	25	12	14	200	Fair	Remain	0 - Remain
5	Syagrus Romanzoffiana	Queen Palm	17	25	8		Poor	Remove	51
6	Cocos Nucifera	Coconut Palm	6	15	8	48	Good	Remove	51
7	Hyphorbe Lagenicaulis	Bottle Palm	6	8	8	48	Poor	Remain	0 - Remain
8	Quercus Virginiana	Live Oak	13	33	30	100	Good	Remain	0 - Remain
9	Ligustrum Japonica	Ligustrum	20	12	12	156	Fair	Remain	0 - Remain
10	Syagrus Romanzoffiana	Queen Palm	14	25	8		Poor	Remove	51
11	Ligustrum Japonica	Ligustrum	36	12	8		Poor	Remove	101
12	Thrinax Radiata	Thrinax	8	10	12	60	Good	Relocate	0 - Relocate
13	Dypsis Decari	Triangle Palm	16	20	10	132	Good	Remain	0 - Remain
14	Encephalortos Ferrox	Cycad	7	5	5	39	Good	Relocate	0 - Relocate
15	Encephalortos Ferrox	Cycad	17	5	6	102	Good	Relocate	0 - Relocate
16	Syagrus Romanzoffiana	Queen Palm	13	21	16	104	Fair	Remove	201
17	Thrinax Radiata	Thrinax	6	10	6	48	Good	Relocate	0 - Relocate
18	Thrinax Radiata	Thrinax	9	12	12	72	Good	Relocate	0 - Relocate
19	Ligustrum Japonica	Ligustrum	30	12	12		Poor	Remove	227
20	Encephalortos Ferrox	Cycad	20	5	6	160	Good	Relocate	0 - Relocate
21	Syagrus Romanzoffiana	Queen Palm	16	25	16	128	Good	Remove	201
22	Thrinax Radiata	Thrinax	9	12	12	54	Good	Relocate	0 - Relocate
23	Syagrus Romanzoffiana	Queen Palm	12	20	16	96	Fair	Remove	201
24	Encephalortos Ferrox	Cycad	16	12	6	96	Good	Relocate	0 - Relocate
25	Thrinax Radiata	Thrinax	9	12	12	51	Good	Relocate	0 - Relocate
26	Phoenix Roebelleni	Pygmy Date Palm	4	8	8	24	Good	Remove	51
27	Ligustrum Japonica	Ligustrum	15	18	15		Poor	Relocate	0 - Relocate
28	Phoenix Roebelleni	Pygmy Date Palm	8	12	15	42	Good	Remove	177
29	Phoenix Roebelleni	Pygmy Date Palm	8	12	16	64	Good	Remove	201
30	Livistona Decipens	Ribbon Palm	8	40	16	64	Fair	Relocate	0 - Relocate
31	Dypsis Cabadae	Cabadae	120	40	16		Fair	Relocate	0 - Relocate
32	Phoenix Canariensis	Canary Island Date Palm	25	24 CT / 35 OA	20	200	Good	Relocate	0 - Relocate
33	Dioon Spinulosum	Dioon	15	8	8	87	Good	Relocate	0 - Relocate
34	Dioon Spinulosum	Dioon	14	10	8	90	Good	Remain	0 - Relocate
35	Livistona Chinensis	Chinese Fan Palm	15	10	8	120	Good	Remove	51
36	Dioon Spinulosum	Dioon	14	12	8	112	Good	Relocate	0 - Relocate
37	Ligustrum Japonica	Ligustrum	14	8	12		Poor	Remove	114
38	Veitchia Sp.	Veitchia	8	35	12		Poor	Remove	114
39	Veitchia Sp.	Veitchia	8	40	12	64	Fair	Remove	114
40	Plumeria Rubra	Frangapani	17	12	8	132	Fair	Relocate	0 - Relocate
41	Ligustrum Japonica	Ligustrum	12	15	15		Poor	Remove	177
42	Encephalortos Ferrox	Cycad	14	10	8	112	Good	Relocate	0 - Relocate
43	Ligustrum Japonica	Ligustrum	12	8	10		Poor	Remove	79
44	Ligustrum Japonica	Ligustrum	36	15	15	288	Fair	Relocate	0 - Relocate
45	Ligustrum Japonica	Ligustrum	27	10	12		Poor	Remove	114
46	Ligustrum Japonica	Ligustrum	40	15	15		Poor	Remove	354
47	Ligustrum Japonica	Ligustrum	28	10	16	220	Fair	Relocate	0 - Relocate
48	Hyphorbe Verschaffetii	Spindle Palm	9	15	8	96	Good	Relocate	0 - Relocate
49	Wodyetia Bifurcate	Foxtail Palm	10	-	-	76	Good	Relocate	0 - Relocate
50	Veitchia Sp.	veitchia - Triple / Specimen	24	32	12	196	Good	Remove	114
51	Phoenix Roebelleni	Pygmy Date Palm	8	14	16	64	Good	Remove	201
52	Syagrus Romanzoffiana	Queen Palm	15	16	12		Poor	Remove	114
53	Syagrus Romanzoffiana	Queen Palm	15	35	12		Poor	Remove	114
54	Ptychosperma Elegans	Solitaire Palm - Triple	11	25	25	84	Fair	Remove	491
55	Hyphorbe Verschaffetii	Spindle Palm	18	12	12	144	Good	Relocate	0 - Relocate
56	Ptychosperma Elegans	Solitaire Palm - Triple	16	25	12	128	Fair	Remove	114
57	Roystonea Elata	Royal Palm	19	60	16	148	Fair	Remain	0 - Remain
58	Roystonea Elata	Royal Palm	17	55	16	132	Good	Remain	0 - Remain
59	Roystonea Elata	Royal Palm	25	60	16	200	Good	Remain	0 - Remain
60	Quercus Virginiana	Live Oak	21	25	40	164	Good	Remain	0 - Remain
61	Ligustrum Japonica	Ligustrum	17	25	20		Poor	Remove	314
62	Ptychosperma Elegans	Solitaire Palm	4	35	8	24	Good	Remove	51
63	Ptychosperma Elegans	Solitaire Palm	4	35	12	24	Good	Remove	114
64	Licuala Grandis	Licuala	3	15	8	20	Good	Relocate	0 - Relocate
65	Ptychosperma Elegans	Solitaire Palm	8	35	8	60	Good	Remove	51
66	Thrinax Radiata	Thrinax	5	28	8	40	Good	Relocate	0 - Relocate
67	Cocos Nucifera	Coconut Palm	9	30	16	68	Good	Remove	201
68	Ptychosperma Elegans	Solitaire Palm	4	28	8	24	Good	Remove	51
69	Ptychosperma Elegans	Solitaire Palm	12	30	16	96	Good	Remove	201
70	Sabal Palmetto	Sabal Palm	12	35	16	96	Good	Remove	201
71	Sabal Palmetto	Sabal Palm	16	30	16	128	Good	Remove	201
72	Roystonea Elata	Royal Palm	20	50	16	160	Fair	Relocate	0 - Relocate
73	Cocos Nucifera	Coconut Palm	10	40	16	76	Fair	Remove	201
74	Cocos Nucifera	Coconut Palm	12	35	16	96	Fair	Remove	201
75	Cocos Nucifera	Coconut Palm	9	35	16	68	Fair	Remove	201
76	Cocos Nucifera	Coconut Palm	9	35	16	68	Fair	Remove	201
77	No Number On Plan	-	-	-	-	-	-		0 - Remain
78	Phoenix Reclinata	Reclinata - Multi	44	30	16	352	Good	Remain	0 - Remain
79	Phoenix Reclinata	Reclinata - Multi	42	30	16	336	Good	Relocate	0 - Relocate
80	Phoenix Reclinata	Reclinata - Multi	68	18	19	544	Good	Relocate	0 - Relocate
81	Livistona Chinensis	Chinese Fan Palm	7	40	14	52	Fair	Remain	0 - Remain
82	Livistona Chinensis	Chinese Fan Palm	9	35	14	68	Good	Remain	0 - Remain
83	Livistona Chinensis	Chinese Fan Palm - Double	15	35	18	120	Good	Remain	0 - Remain
84	Livistona Chinensis	Chinese Fan Palm	8	25	14	60	Good	Remain	0 - Remain
85	Phoenix Roebelleni	Pygmy Date Palm - Triple	15	10	12	120	Good	Remove	114
86	Phoenix Roebelleni	Pygmy Date Palm	4	8	10	32	Good	Remove	314
87	Phoenix Roebelleni	Pygmy Date Palm	12	10	10	96	Good	Remove	314
88	Phoenix Roebelleni	Pygmy Date Palm	12	10	10	96	Good	Remove	314
89	Ptychosperma Elegans	Solitaire Palm	16	20	16	128	Good	Remove	201
90	Roystonea Elata	Royal Palm	21	48	16	168	Good	Remain	0 - Remain
91	Roystonea Elata	Royal Palm	19	50	16	152	Good	Relocate	0 - Relocate
92	Roystonea Elata	Royal Palm	17	50	16	136	Good	Remain	0 - Remain
93	Cocos Nucifera	Coconut Palm	7	25	16	56	Fair	Remove	201
						Total Canopy Loss			7,935 Sq. Ft.
						Mitigation Trees Needed (500 Sq. Ft. Each)			16

ROOT PRUNE NOTES

1. LANDSCAPE CONTRACTOR TO VERIFY WITH SITE SUPERVISOR OF ANY EXISTING UNDERGROUND UTILITIES PRIOR ANY ROOT PRUNING OR REMOVAL OF EXISTING TREES.
2. TO AVOID DAMAGE TO THE TREES AND PROPERTY, THE ROOT PRUNING MUST BE DONE BY A SKILLFUL LANDSCAPE CONTRACTOR WITH EXPERIENCE IN THIS TYPE OF WORK.
3. A BACK PRUNING OF THE CANOPY WILL BE NECESSARY TO BALANCE THE SIZE OF THE CROWN WITH THE ROOT BALL AFTER THE ROOT PRUNING IS COMPLETE. NO UNNECESSARY BACK PRUNING WILL BE ALLOWED. LANDSCAPE CONTRACTOR MUST RESPECT THE NATURAL CHARACTER OF EACH PARTICULAR SPECIE.
4. ALL TREES SHALL BE ROOT PRUNED 45 DAYS PRIOR TO TRANSPLANTING.
5. LARGE TREES THAT HAVE BEEN ROOT PRUNED SHALL BE STAKED TO AVOID ACCIDENTS AND/OR WINDFALL
6. LANDSCAPE CONTRACTOR SHALL USE BARRICADES TO PROTECT TRANSPLANTED AND REMAINING EXISTING TREES OR PALMS SHOWN ON THIS PLAN.
7. SUFFICIENT WATER SHALL BE APPLIED TO THE TREES DURING CONSTRUCTION.
8. IN THE EVENT THAT HEAVY EQUIPMENT IS NECESSARY TO MOVE THE TREES, LANDSCAPE CONTRACTOR SHALL TAKE ALL PRECAUTIONS TO AVOID "SKIRTING" THE BARK OF THE TREES.
9. TREES TO BE TRANSPLANTED ON SITE SHALL BE DONE IMMEDIATELY.
10. LANDSCAPE CONTRACTOR SHALL BE RESPONSIBLE FOR THE MAINTENANCE OF THE TREES AT THE SITES. PROVISION SHALL BE MADE FOR STAKING, BARRICADES, WATER, WEEDING, AND FERTILIZERS AS REQUIRED DURING CONSTRUCTION. THE PLANTS SHALL BE IN THEIR UTMOST BEST CONDITION FOR THE FINAL TRANSPLANTATION TO THE SITE.
11. CONTRACTOR SHALL BE LIABLE FOR DAMAGE TO TREES THAT ARE TO REMAIN AND THOSE THAT ARE TO BE RELOCATED.

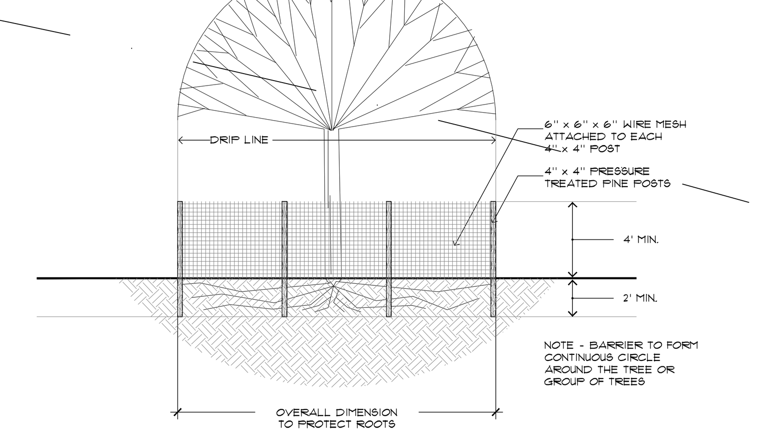

1. WIRE MESH TREE PROTECTION BARRIER DETAIL
NOT TO SCALE

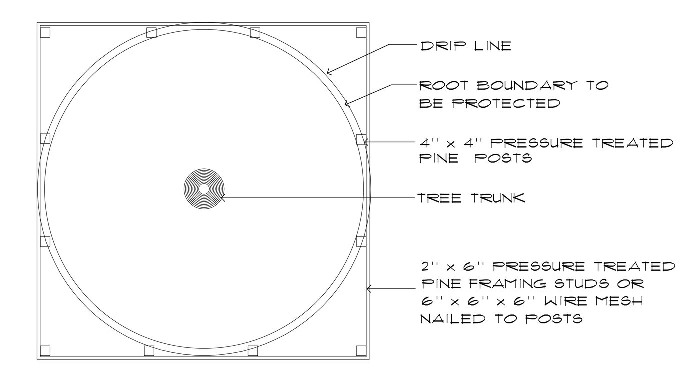

2. WOOD BARRIER DETAIL PLAN
NOT TO SCALE

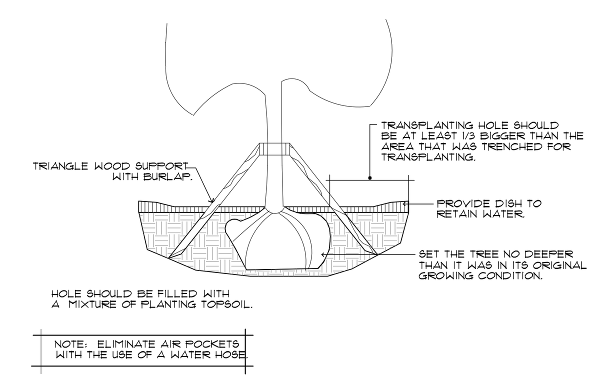

3. TREE TRANSPLANTING DETAIL
NOT TO SCALE

TREE DISPOSITION PLANT LIST, NOTES, AND DETAILS

SCALE: N.T.S.

No.	REVISIONS	BY

-:NOTICE:-
GENERAL CONTRACTOR :
FOR CONSTRUCTION, IT IS YOUR RESPONSIBILITY TO WORK TOGETHER WITH THE ARCHITECTURAL & ENGINEERING DRAWINGS. IF ANY DISCREPANCIES APPEAR, CALL THE ARCHITECTS & THE ENGINEERS OF RECORD BEFORE CONTINUING ANY WORK.

PROJECT TITLE: PROPOSED NEW RESIDENCE FOR: MR. FRANK MATA

PROJECT LOCATION: LOCATED AT: 280 ARVIDA PARKWAY CORAL GABLES, FL 33156

CALIL ARCHITECTS
1728 CORAL WAY, SUITE-702 MIAMI, FLORIDA 33145
AA 26001949 PHONE: (305) 860-9600 FAX: (305) 860-9602
EDUARDO A. CALIL, ARCHITECT LICENSE No. AR 0009383
WWW.CALILARCHITECTS.COM

"In my professional judgement and to the best of my knowledge and belief, these plans and specifications comply with applicable Building Codes." This document and the information it contains is the exclusive property of CALIL ARCHITECTS and may not be reproduced or used for other purpose other than the specific project for which it was prepared without the explicit consent of CALIL ARCHITECTS

REGISTERED LANDSCAPE ARCHITECT LAURA M. LLERENA-HERNANDEZ 6667125 STATE OF FLORIDA

DESIGNING BEAUTIFUL SPACES
LLA LAURA LLERENA & ASSOCIATES
LANDSCAPE ARCHITECTURE
13170 S.W. 128th Street, Suite 207, Miami, FL 33186
Tel: 305-256-1199 / Fax: 305-256-1155
www.lllerena-associates.com

DRAWINGS AND SPECIFICATIONS AS INSTRUMENTS OF SERVICE ARE AND SHALL REMAIN THE PROPERTY OF THE LANDSCAPE ARCHITECT WHETHER THE PROJECT FOR WHICH THEY ARE MADE IS EXECUTED OR NOT. THEY ARE NOT TO BE USED BY OWNER ON OTHER PROJECTS EXCEPT BY AGREEMENT IN WRITING AND WITH APPROPRIATE COMPENSATION TO THE LANDSCAPE ARCHITECT.

811 Know what's below. Call before you dig.

SHEET No.
EX-2

DRAWN LR
CHECKED LH
DATE AUGUST '21
SCALE AS SHOWN
JOB No. 21635