Historical Resources & Cultural Arts

2327 Salzedo Street
Coral Gables
Florida, 33134

P: 305-460-5093
E: hist@coralgables.com

Table of Contents

1. City Commission Resolution
2. Letter of Intent, provided by Architect
3. Images of Existing Windows
4. Images of Mockup Window
5. City Hall Window Proposal
    a. Mockup Window Shop Drawings
    b. Hope's Window Impact Detail
6. Hope's Window Background Information
    a. Hope's Window Brochure

DocuSign Envelope ID: ABE5DE62-1D20-4566-8CD2-C6B18241EF09

CITY OF CORAL GABLES, FLORIDA

RESOLUTION NO. 2023-274

A RESOLUTION OF THE CITY COMMISSION APPROVING THE CITY'S HISTORIC PRESERVATION BOARD'S REQUEST THAT ANY ALTERATIONS TO THE CITY HALL COMPLEX'S WINDOWS PROCEEDING PURSUANT TO SECTION 1-104 OF THE CITY'S ZONING CODE BE DONE IN CONSULTATION WITH THE CITY'S HISTORIC PRESERVATION OFFICER AND BE PRESENTED TO THE CITY'S HISTORIC PRESERVATION BOARD FOR REVIEW AND FEEDBACK.

WHEREAS, Section 1-104 of the City's Zoning Code provides that following a public hearing the City Commission may authorize the modification of certain City facilities outside of certain procedures outlined in the Zoning Code ; and

WHEREAS, should the City proceed with any alterations to the windows of the City Hall complex pursuant to that Section of the City's Zoning Code the City directs that the City's Historic Preservation Officer be involved with and consulted during the selection of any replacement windows for the City Hall Complex; and

WHEREAS, should the City proceed pursuant to Section 1-104 of the City's Zoning Code any proposed alterations shall be presented to the City's Historic Preservation Board, along with a staff report on the proposed alterations, for the Board's non-binding review and feedback prior to any public hearing held pursuant to Section 1-104 of the Zoning Code;

NOW, THEREFORE, BE IT RESOLVED BY THE HISTORIC PRESERVATION BOARD OF THE CITY OF CORAL GABLES:

SECTION 1. The foregoing **"WHEREAS"** clauses are hereby ratified and confirmed as being true and correct and are hereby made a specific part of this Resolution upon adoption hereof.

SECTION 2. The City Commission direct that any alterations to the City Hall Complex windows proposed by the City to proceed pursuant to Section 1-104 of the City's Zoning Code be selected in consultation with the City's Historic Preservation Officer and be presented to the Historic Preservation Board, along with a staff report on the proposed alterations, for non-binding review and feedback prior to any public hearing held pursuant to Section 1-104 of the Zoning Code.

SECTION 3. That this Resolution shall become effective upon the date of its passage and adoption herein.

DocuSign Envelope ID: ABE5DE62-1D20-4566-8CD2-C6B18241EF09

PASSED AND ADOPTED THIS TWENTY-SIXTH DAY OF SEPTEMBER, A.D., 2023.

(Moved: Castro / Seconded: Menendez)
(Yeas: Fernandez, Menendez, Anderson, Castro, Lago)
(Unanimous: 5-0 Vote)
(Agenda Item: 2-1)

APPROVED:

DocuSigned by:
53B880AB93824A5...

VINCE LAGO
MAYOR

ATTEST:

DocuSigned by:
358417D2FA884FF...

BILLY Y. URQUIA
CITY CLERK

APPROVED AS TO FORM
AND LEGAL SUFFICIENCY:

DocuSigned by:
9A595ED64D304E8...

CRISTINA M. SUÁREZ
CITY ATTORNEY

FERGUSON GLASGOW SCHUSTER SOTO, INC.
901 Ponce De Leon Blvd Suite 304 Coral Gables, FL 33134 305.443.7758 (vc) 305.445.9957 (fx)
Architecture
Planning
Interior Design

December 6, 2024

City of Coral Gables
Historic Preservation Board
405 Biltmore Way
Coral Gables, FL 33134

Re: Historic Preservation Board
405 Biltmore Way, Coral Gables, FL 33134
City of Coral Gables City Hall – Windows Restoration/Replacement
Letter of Intent

Dear Sir or Madam,

In September of 2023, the City engaged our firm to provide support in their consideration to restore the exterior windows of City Hall or replace them with an appropriate product/system that would provide historically compatible aesthetics along with impact resistance.

Various options were considered for the project:

1. Restore Existing Windows: Existing wood window sashes with custom profiles would be removed and wood restored in the contractors' shop, painted and re-installed. Existing wood frames would be repaired and re-painted in the field. Hardware repaired if possible or replaced where necessary/missing with historically consistent items.
    a. Pro: Retains the historical aesthetic and some of the original glazing. Converting to fixed sashes may be considered for durability.
    b. Con: Not hurricane resistant. The building would continue to be subject to potential catastrophic structural damage if windows broken and/or sucked out by negative wind pressures. Wood windows require bi-annual maintenance to treat/prevent rot and termite damage. Requires annual painting and sealing. There is a limited number of wood window restoration companies in Florida. Little or no warrantee.
2. Non-Impact Window Protection
    a. Shutters: Existing removable storm shutters.
        i. Pro: As currently existing the only positive is impact protection as long as the negative hurricane wind pressures do not pull off the system.
        ii. Con: Existing shutters anchors are embedded in stone, not structurally sufficient to withstand wind pressures. The structure surrounding the windows is primarily terracotta, also not structurally sufficient to withstand wind pressures.
    b. Interior storm windows: Thin profile impact/wind resistant products installed behind existing windows inside openings. The structure surrounding the windows (terracotta) needs reinforcement for wind resistance.
        i. Pro: Retains structural aesthetic on exterior. Storm shutter anchors can be removed from stone and patched. Impact/Wind Pressure compliant products to protect window openings.

A R 9 9 4 5
Web: www.fgss.net
Email:fgss@fgss.net

ii. Con: Aesthetic on interior is affected. It is known to create a humid/hot environment in the cavity between the exterior window and the storm window, accelerating wood window deterioration. Exterior wood windows would still be subject to damage during a hurricane. Exterior wood windows would require bi-annual maintenance to treat/prevent rot and termite damage. Exterior wood windows require annual painting and sealing.

3. Replace with impact resistant wood windows (Luxbaum):
    a. Pro: Impact/Wind Pressure compliant products to protect building openings. Wood material is consistent with original window material. Can match historical colors. Warrantied systems.
    b. Con: Window profile not consistent with original window design (wider profiles).
4. Replace with impact resistant aluminum windows (Windoor):
    a. Pro: Can match historical colors. Warrantied systems.
    b. Con: Material not consistent with original window material. Window profiles cannot be customized to match historical window profiles.
5. Replace with impact resistant aluminum/wood windows (Marvin):
    a. Pro: Can match historical colors. Warrantied systems. Interior of window consistent with original window material.
    b. Con: Window profile cannot be customized to match historical window profiles.
6. Replace with impact resistant steel windows (Hope's):
    a. Pro: Impact/Wind Pressure compliant products to protect building openings. Window profile can be customized to match historical window profiles.
    b. Con: Material not consistent with original window material.

If you have any further questions or concerns on this or any other matters, please feel free to contact me. Thank you.

Sincerely,

Claudia Noval, AIA

104
ELEVATOR
LOBBY
→

104A

PRIMER
GAP-1

OCEAN IMPACT
WINDOWS & DOORS
HOPE'S
104
ELEVATOR
LOBBY
→

102
CHAMBERS
OCEAN
IMPACT

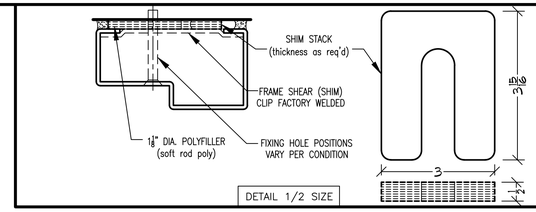

NOTES:

ALL VOIDS SHOULD BE INSULATED AS PART OF A NORMAL INSTALLATION PROCEDURE

FOR ALL INFORMATION REGARDING ACCEPTABLE SUBSTRATE MATERIALS AND ANCHORS REFERENCE THE HOPE'S FLORIDA PRODUCT APPROVAL INSTALL DOCUMENTS. THESE WERE PROVIDED WITH THE FIRST SUBMITTAL AND CAN BE FOUND ON FLORIDABUILDING.ORG WEBSITE.

INSTALLER NOTE:
THE 1/4" CAULK JOINT SHOWN AT THE PERIMETER OF OUR WINDOWS IS THE MAXIMUM ALLOWABLE CAULK JOINT

MAILED VIA:	CHKD
EMAIL	
EMAIL	RJF Ø7/19/24
EMAIL	RJF Ø8/5/24

REQ'D	REPORT OF PRINTS	DATE	SHEET
1	1 - Ocean Impact Windows & Doors 1 - Dencon Architectural, Inc.	7/18/24	FULL SET
1	1 - Ocean Impact Windows & Doors 1 - Dencon Architectural, Inc.	7/22/24	FULL SET
1	1 - Ocean Impact Windows & Doors 1 - Dencon Architectural, Inc.	8/6/24	FULL SET

SHIM:

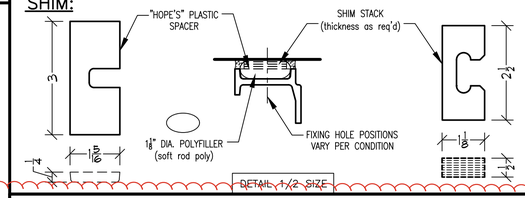

DATE	BY	NO	REVISIONS
8/6/24	MSB	R1	REVISED PER RETURNED DWGS REC'D 7/31/24 & EMAILS THROUGH 8/6/24

Coral Gables City Hall - Mock Up

APPROVAL EVENTS:

HOPE'S SHOP DRAWING PRELIMINARY SUBMITTAL :	07/18/24
HOPE'S SHOP DRAWING FIRST SUBMITTAL :	07/22/24
HOPE'S SHOP DRAWING SECOND SUBMITTAL :	08/06/24
ANTICIPATED RECEIPT OF APPROVED SHOP DRAWINGS:	08/16/24

(SEE CUSTOMER CHECKLIST AND SUBMITTAL PACKAGE)

HOPE'S SHIPMENTS TO BEGIN: 18-20 WEEKS AFTER APPROVAL

FAILURE TO PROVIDE THE ITEMS IN THE CUSTOMER CHECKLIST AND ITEMS OUTLINED IN THE SHOP DRAWINGS AT TIME OF RELEASE MAY HAVE AN IMPACT ON THE MANUFACTURING SCHEDULE.

WINDOW/DOOR SERIES:

Old World Suite™ SERIES IMPACT RESISTANT WINDOWS.
8630™ IMPACT RESISTANT PERIMETER FRAME.

HARDWARE FINISH: ORB - OIL RUBBED BRONZE

SCREENS:

PRETREATMENT & FINISHES:

FOLLOWING PRODUCT FABRICATION, MATERIAL SHALL BE PRETREATED AND FINISHED IN ACCORDANCE WITH HOPE'S POWER OF 5 "COASTAL" HOT-DIP GALVANIZED FINISHING SYSTEM. (SASH)

COLOR SELECTION:
SEE BELOW

FOLLOWING PRODUCT FABRICATION, MATERIAL SHALL BE PRETREATED AND FINISHED IN ACCORDANCE WITH HOPE'S POWER OF 5 FINISHING SYSTEM. (FRAME)

INTERIOR: MP11477 – NATURAL WHITE
EXTERIOR: PAINT COLOR MATCH (GREEN)

HOPE'S CUSTOMER:

Ocean Impact Windows & Doors
675 Nw 116Th Street
Miami, FL 33168

SHOP DRAWINGS ARE BASED ON:
Hope's Proposal dated 6/21/24

FERGUSON GLASGOW SCHUSTER SOTO, INC.

THIS REVIEW IS ONLY FOR GENERAL CONFORMANCE WITH THE DESIGN CONCEPT AND THE INFORMATION GIVEN IN THE CONSTRUCTION DOCUMENTS. CORRECTIONS OR COMMENTS MADE ON THE SHOP DRAWINGS DURING THIS REVIEW DO NOT RELIEVE THE CONTRACTOR FROM COMPLIANCE WITH THE REQUIREMENTS OF THE PLANS AND SPECIFICATIONS AND APPLICABLE LAWS, CODES AND REGULATIONS. APPROVAL OF A SPECIFIC ITEM SHALL NOT INCLUDE APPROVAL OF AN ASSEMBLY OF WHICH THE ITEM IS A COMPONENT. THE WORK SHALL BE CARRIED OUT IN ACCORDANCE WITH THIS REVIEW IN ACCORDANCE WITH THE CONTRACT DOCUMENTS WITHOUT CHANGE IN THE CONTRACT SUM OR CONTRACT TIME. PROCEEDING WITH THE WORK IN ACCORDANCE WITH THIS REVIEW INDICATES YOUR ACKNOWLEDGEMENT THAT THERE WILL BE NO CHANGE IN THE CONTRACT SUM OR CONTRACT TIME. THE CONTRACTOR IS RESPONSIBLE FOR: DIMENSIONS TO BE CONFIRMED AND CORRELATED AT THE JOBSITE; INFORMATION THAT PERTAINS SOLELY TO THE FABRICATION PROCESSES OR TO THE MEANS, METHODS, TECHNIQUES, SEQUENCES AND PROCEDURES OF CONSTRUCTION; COORDINATION OF THE WORK WITH THAT OF ALL OTHER TRADES AND PERFORMING ALL WORK IN A SAFE AND SATISFACTORY MANNER.

- [x] NO EXCEPTIONS TAKEN
- [ ] FURNISH AS CORRECTED OR NOTED
- [ ] REVISE AND RESUBMIT
- [ ] REJECTED
- [ ] SUBMIT SPECIFIED ITEM

City Hall_54133_Mock_Up_Sub2 marked up

REVIEWER Claudia Noval, AIA DATE 08/07/2024

IMPORTANT

GLASS CONTRACTORS SHOULD MAKE TEMPLATES AND CHECK ALL MEASUREMENTS FROM COMPLETED WORK AND NOT FROM THIS DRAWING. THIS DRAWING COVERS ONLY THE WORK IN HOPE'S CONTRACT. HOPE'S DOES NOT ASSUME OR ACCEPT ANY RESPONSIBILITY FOR MEASUREMENTS AFFECTING THE WORK OF OTHER CONTRACTORS.

DETAILS OF MASONRY, STRUCTURAL STEEL AND OTHER MATERIALS RELATED TO OUR WORK, BUT NOT FURNISHED BY HOPE'S, HAVE BEEN INDICATED ON OUR SHOP DRAWINGS TO THE BEST OF OUR ABILITY AND REFLECT OUR INTERPRETATION OF THE ARCHITECTURAL DRAWINGS AND OUR CONTRACT REQUIREMENTS.

TO ASSURE PROPER FITTING AND COORDINATION OF OUR WORK WITH OTHER TRADES, OUR SHOP DRAWINGS MUST BE CHECKED BY THE CONTRACTOR AND/OR ARCHITECT AGAINST DRAWINGS PROVIDED BY OTHER SUPPLIERS OF OTHER MATERIALS THAT RELATE TO OUR WORK, BUT WHICH ARE NOT FURNISHED BY HOPE'S.

OUR MANUFACTURING TOLERANCES ON EITHER STEEL SASH SECTIONS OR HOLLOW METAL ARE +/- 1/16".

WINDOW INSTALLATION INSTRUCTIONS

INSPECTION:

A) CHECK OPENING TO VERIFY THAT CONDITIONS CONFORM WITH DETAILS AND DIMENSIONS SHOWN ON HOPE'S APPROVED SHOP DRAWINGS.
B) CONDITIONS WHICH MAY ADVERSELY AFFECT THE WINDOW INSTALLATION MUST BE CORRECTED BY THE GENERAL CONTRACTOR BEFORE INSTALLATION BEGINS.

INSTALLATION:

A) WINDOWS SHALL BE INSTALLED BY EXPERIENCED PERSONNEL.
B) INSTALL INTO OPENINGS IN STRICT ACCORDANCE WITH "HOPE'S" APPROVED SHOP DRAWINGS.
1. SET WINDOWS PLUMB, LEVEL, AND TRUE TO LINE WITHOUT WARP, TWIST, OR RACK OF FRAMES, OR VENTILATORS.
2. ANCHOR SECURELY TO SOUND PERIMETER CONSTRUCTION AT ALL GIVEN ANCHOR POINTS. SHIM SPACE BETWEEN OPENING AND WINDOW TO ENSURE THAT THE UNITS REMAIN PLUMB AFTER SECURING SCREWS. NOTE GLAZING BEADS THAT ARE REMOVED TO ACCESS FIXING SCREWS MUST BE REPLACED TO THE SAME LOCATION ON THE WINDOW. GLAZING BEADS ARE CUSTOM FITTED AND NOT INTERCHANGEABLE.
3. THE EXTERIOR JOINTS BETWEEN THE WINDOWS, TRIM, AND MULLIONS SHALL BE PROPERLY SEALED WATERTIGHT WITH AN APPROVED SEALANT AND NEATLY POINTED. AT SILLS, SEAL OVER ALL EXPOSED SASH FIXING SCREW HEADS.
4. ALL WINDOWS SHALL BE COMPLETELY CHECKED AND ADJUSTED AFTER INSTALLATION AND BEFORE GLAZING TO ASSURE PROPER FIT OF VENTILATOR TO FRAME AND TO ASSURE THAT THE OPERATING MECHANISM WORKS FREELY AND SATISFACTORILY.
5. DURING THE GLAZING PROCESS VENTILATORS MUST BE CLOSED AND LATCHED .

C. ANY ABRAIDED SURFACE OF THE WINDOW FINISH SHALL BE CLEANED AND TOUCHED UP WITH AIR DRY PAINT, AS APPROVED BY " HOPE'S" IN A COLOR TO MATCH THE FACTORY APPLIED FINISH.
D. INSTALL OPTIONAL SCREENS (DETERMINED BY THE GENERAL CONTRACTOR)

CLEANING:

A. THE INSTALLER SHALL LEAVE THE WINDOW SURFACES CLEAN AFTER INSTALLATION. THE GENERAL CONTRACTOR SHALL BE RESPONSIBLE FOR FINAL CLEANING.
B. ANY PROTECTION NECESSARY DUE TO CLEANING OF ADJACENT MATERIALS IS THE RESPONSIBILITY OF THE GENERAL CONTRACTOR.

CUSTOMER CHECKLIST:

PLEASE CONFIRM THE FOLLOWING ITEMS ARE INCLUDED WHEN RETURNING THE DRAWING TO HOPE'S. ITEMS THAT ARE NOT INCLUDED BUT ARE REQUIRED WILL PREVENT THE PROJECT FROM BEING RELEASED INTO PRODUCTION.

REQUIRED	ITEM(S) REQUIRED FOR APPROVAL – BY CUSTOMER	CHECK BOX
Yes	PURCHASE ORDER AND DEPOSIT REQUIREMENTS	✓
Yes	PAINT COLOR SELECTION	☐
Yes	HARDWARE FINISH SELECTION	✓
No	SCREEN MESH SELECTION	☐
Yes	ALL SIZES HAVE BEEN VERIFIED OR PROVIDED	✓
Yes	APPROVAL OF ANCHORAGE DESIGN	✓
Yes	HANDING & SWING OF OPERABLE UNITS (CONFIRMED OR PROVIDED)	✓
No	APPROVED FOR CONSTRUCTION HARDWARE SCHEDULES AND TEMPLATES	☐

NOTE: PROCEDURE FOR THE GLAZING OF HOPE'S WINDOWS AND DOORS OUTLINED ON THESE DRAWINGS SUPERSEDES ALL OTHER INFORMATION PUBLISHED BY HOPE'S WINDOWS, INC. INCLUDING HOPE'S FIELD INSTALLATION MANUAL.

MILL MARKS ON STEEL WINDOW SECTIONS
SECTIONS MADE FROM NEW BILLET STEEL WITH FLANGES ROLLED INTEGRALLY AT THE MILL. SECTIONS ARE CONSISTENT WITH EN 10163 STANDARDS. TOLERANCES ALLOW FOR A MAXIMUM CONCAVITY OF .006, IN FACE OF SECTION. SURFACE ROUGHNESS CONSISTING OF SCALE MARKS, MILL MARKS, PITTING, AND BLEMISHES, ARE INHERENT TO THE PRODUCT AND CAN BE EXPECTED.

HOPE'S SUBMITTAL INCLUDES (3) BLACKLINE REPRODUCIBLE SETS FOR APPROVAL. IF MORE BLACKLINE SETS ARE NEEDED ANY BLACKLINE SET MAY BE USED FOR PRINTING ADDITIONAL SETS. HOPE'S ASKS THAT ONLY ONE BLACKLINE SET BE RETURNED FOR OUR RECORDS. THANK YOU.

HOPE'S CUSTOM FABRICATED ARCHITECTURAL PRODUCTS REQUIRE AN INTENSIVE MANUFACTURING SCHEDULE. PLEASE MINIMIZE SHOP DRAWING REVIEW TIME AND ELIMINATE UNNECESSARY RESUBMITTALS SO WE CAN MAINTAIN OUR DELIVERY SCHEDULES. WE WOULD BE PLEASED TO PROVIDE ANY ASSISTANCE TO HELP EXPEDITE APPROVALS. THANK YOU.

THE DRAWINGS REPRESENTED HERE-IN ARE AND SHALL REMAIN THE PROPERTY OF HOPE'S WINDOWS, INC. AND ANY REPRODUCTION, REUSE, SALE OR OTHER DISTRIBUTION OF THESE DOCUMENTS TO HOPE'S COMPETITION OR OTHER PARTIES NOT RELATED TO HOPE'S WORK FOR THIS SPECIFIC PROJECT IS EXPRESSLY FORBIDDEN WITHOUT THE WRITTEN CONSENT OF HOPE'S. VISUAL CONTACT OF THIS NOTE CONSTITUTES EVIDENCE OF ACCEPTANCE OF THESE RESTRICTIONS.

- [x] 1ST SUBMITTAL
- [x] 2ND SUBMITTAL
- [ ] 3RD SUBMITTAL
- [ ] OTHER SUBMITTALS
- [ ] FINAL SHOP DRAWINGS
- [ ] PROCESSED BY DETAILING
- [ ] PROCESSED BY CAD/CAM
- [ ] FOR FIELD USE

INSTRUCTIONS FOR APPLYING SHIM SPACER TO SASH

"HOPE'S" PROVIDES AN ADEQUATE NUMBER OF PLASTIC SHIMS WITH ALL SASH (see sketch above). THIS SPACER IS FIELD ATTACHED BY THE ERECTOR TO THE SASH AT EACH FIXING HOLE POSITION WITH THE OPEN EDGE SLOT MATCHED TO THE SASH FIXING SLOT. THE SPACERS ARE ATTACHED WITH SEALANT OR LIQUID NAIL SUPPLIED BY THE ERECTOR.
THE SPACER PROVIDES A 3" FLUSH SURFACE AT EACH FIXING SCREW FOR SHIMMING BETWEEN THE SASH AND OPENING.
A CAULKING ROD OR POLYFILLER IS FITTED BETWEEN THE SHIM SPACERS.
SET SASH IN THE OPENING AND EQUALIZE THE PERIMETER SPACING BY SHIMMING AT THE SPACER LOCATIONS. ADJUST THE SASH WITH SCREWS AND SHIMS SO THAT THE UNITS ARE PLUMB, LEVEL, AND TRUE TO LINE WITHOUT WARPAGE.

HOPE'S® WINDOWS, INC.
84 HOPKINS AVE. / JAMESTOWN, NEW YORK 14701
PHONE (716) 665-5124 ~ FAX (716) 665-6903
Project Manager: Matthew S. Bentley
mbentley@hopeswindows.com, Ext(328)

SECTIONS FULL SIZE UNLESS OTHERWISE NOTED ELEVATIONS 3/4"=1'-0"
ALL ELEVATIONS VIEWED FROM EXTERIOR UNLESS OTHERWISE SPECIFIED

ARCHITECT
Ferguson Glasgow Schuster Soto, Inc.
Coral Gables, FL

CUSTOMER
Ocean Impact Windows & Doors
Miami, FL

PROJECT
Coral Gables City Hall – Mock Up
Coral Gables, FL

DRAWN: LEN/MSB
DATE: 07/18/24
CHECKED:
DATE:

CONTRACT NO. 54133
COMPLETE SET INCLUDES CS, GLZ, SDL, A-A2
SHEET CS REVISION R1

CS

NOTE: THIS SHEET IS FOR ASSISTANCE WITH GLAZING. ALL MATERIALS FOR EACH GLASS BITE ARE SHOWN ON BELOW DETAILS. REFERENCE EACH INDIVIDUAL DETAIL ON THE FOLLOWING SHEETS FOR PROPER GLASS BITE AND KEY BACK TO THIS SHEET.

GLAZING INSTRUCTIONS:

THE BELOW STEPS ARE HOPE'S INSTRUCTIONS ON HOW TO GLAZE WINDOWS AND/OR DOORS OF OUR ONE55 PRODUCT SERIES. EACH STEP IS TO BE REVIEWED WITH A LICENSED GLAZIER PRIOR TO PERFORMING ANY STEPS TO ENSURE WARRANTY OF THEIR WORK.

STEP 1: PLACE FRAMES ON A SET OF LEVEL BENCHES. IF BENCH GLAZING, OR HANG FRAME IN OPENING LEVEL & PLUMB.

STEP 2: TAKE GLAZING BEAD OFF FRAMES AND KEEP THEM SORTED SO THE SAME BEADS ARE REINSTALLED LATER. IF BATCH CUT BEADS WERE PROVIDED, LOCATE THE APPROPRIATE PACKAGE FOR LITE BEING GLAZED.

STEP 3: MEASURE WIDTH & HEIGHT OF FRAME POCKET TO MAKE SURE THEY MATCH THE SHOP DRAWINGS AND GLASS WILL FIT IN WITH THE PROPER GLASS BITES.

STEP 4: CLEAN ENTIRE GLAZING POCKET WITH ISOPROPYL ALCOHOL. DO NOT USE DENATURED ALCOHOL WHICH WILL LEAVE A FILM AND HINDER ADHESION.

STEP 5: GLUE GLAZING SHIMS TO SECTION WITH SUPER GLUE. SHIMS TO BE SET AN 1/16" FROM SIGHT GLASS.

STEP 6: GLUE SETTING BLOCKS TO WINDOW SECTIONS AT PROPER LOCATIONS. REFER TO HOPE'S FIELD INSTALLATION & GANA MANUALS FOR PROPER LOCATIONS. ALL SETTING BLOCKS TO BE MADE FROM SILICONE MATERIAL.

STEP 7: FOR RATED PROJECTS, LAY A LARGE BEAD OF SEALANT ALONG CORNER OF FRAME AS SHOWN IN ILLUSTRATION TO LEFT. THIS IS AN IMPORTANT STEP SINCE IT WILL ENSURE SILICONE WILL FILL THE POCKET AND MAKE CONTACT WITH THE GLASS EDGE & INNERLAYER. IT IS VERY DIFFICULT TO FORCE SEALANT INTO THIS AREA WHEN GLASS IS IN PLACE.

STEP 8: CLEAN BOTH SIDES OF GLASS WITH ISOPROPYL ALCOHOL (OR WHATEVER THE GLASS MANUFACTURER RECOMMEND).

STEP 9: SET GLASS INTO FRAMES.

STEP 10: INSTALL ADDITIONAL SETTING BLOCKS AS NEEDED FOR CORNER BLOCKING AND TO HOLD PROPER MARGINS.

STEP 11: CAP BEAD AND HEAL BEAD (IF REQUIRED) TO BE PUMPED IN AND TOOLED. POCKET NEXT TO LAMINATE LAYER OF GLASS MUST BE FULLY FILLED WITH SEALANT (FOR BLAST & IMPACT RATED PROJECTS).

STEP 12: LOCATE GLAZING BEADS AND REINSTALL THEM.

STEP 13: FOR NON-RATED WINDOWS, INSTALL GLAZING WEDGE BETWEEN GLASS AND BEADS. WEDGE LEN/MSBGTH TO BE A $\frac{1}{4}$" LONGER PER LINEAR FOOT THAN THE SIGHTGLASS OF FRAME. WEDGE TO BE ROLLED. WETTING AREA WITH GLASS CLEANER WILL HELP WEDGE TO ROLL IN SMOOTHLY.

STEP 14: FOR RATED WINDOWS, INSTALL FOAM TAPE OR CAP BEAD BETWEEN GLASS AND INTERIOR GLAZING BEAD.

STEP 15: FRAME TO BE LEFT ON BENCH OR CLOSED IN OPENINGS UNTIL SEALANT HAS CURED. CONSULT SEALANT MANUFACTURER FOR RECOMMENDATION ON CURING TIME PER JOB CONDITIONS. VENTS ARE NOT TO BE OPERATED WHILE CURING.

SIDE NOTES:

NOTE 1: WHERE POSSIBLE, FRAMES ARE TO BE BENCHED GLAZED FOR CONSISTENCY. BENCHES TO HAVE PROTECTIVE COVERS ON THEM TO PROTECT FRAME SURFACES FROM BEING SCRATCHED.

NOTE 2: ALL PIECES OF GLASS SHOULD BE MEASURED TO MAKE SURE THEY ARE BEING INSTALLED IN THE CORRECT FRAMES. KNOWING THE EXTERIOR / INTERIOR SURFACES IS ALSO IMPORTANT.

NOTE 3: PROPER SAFETY EQUIPMENT SHOULD BE USED AT ALL TIMES. SUCH EQUIPMENT INCLUDES (BUT NOT LIMITED TOO) SAFETY GLASSES, STEEL TOE SHOES, GLOVES... MSDS SHEETS SHOULD BE REFERENCED FOR ALL MATERIALS.

NOTE 4: PRIOR TO INSTALLING GLASS, INSTALLER TO MAKE SURE SEALANT IS COMPATIBLE WITH GLASS MAKE-UP. HOPE'S NOTES FOR A NEUTRAL CURE STRUCTURAL SILICONE TO BE USED. THERE ARE MULTIPLE OPTIONS AVAILABLE AND WHATEVER USED IS TO BE CHECKED WITH GLASS MANUFACTURER PRIOR TO GLAZING.

TYPICAL GLAZING DETAIL FOR 15/32" THICK LAMINATED GLASS - OWS IMPACT APPROVED WINDOWS -

25/32" GLAZING SPACE TO FIT 15/32" CLEAR GLASS.
GLASS MUST CONTAIN 'DUPONT' SENTRY GLASS PLUS .090" INNERLAYER (PER TESTING)
GLASS MAKEUP TO BE REFERENCED FROM FLORIDA STATE APPROVALS.
GLAZING WEEPS ARE NOT REQUIRED FOR LAMINATED GLASS.
ALL GLASS AND GLAZING MATERIALS ARE BY GLAZIER UNLESS NOTED OTHERWISE.

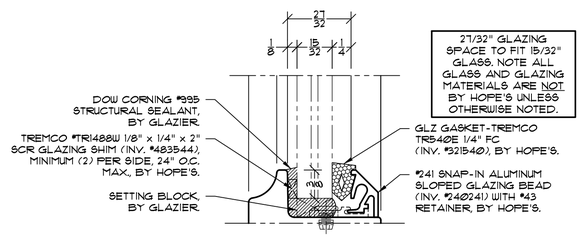

27/32" GLAZING SPACE TO FIT 15/32" GLASS. NOTE ALL GLASS AND GLAZING MATERIALS ARE NOT BY HOPE'S UNLESS OTHERWISE NOTED.

GLASS MAKEUP AT ALL IMPACT RESISTANT WINDOWS/DOOR

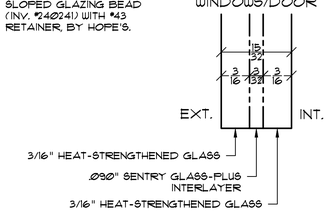

HOPE'S® WINDOWS, INC.
84 Hopkins Ave. / Jamestown, New York 14701
Phone: (716) 665-5124 ~ Fax: (716) 665-6903

PROJECT
Coral Gables City Hall – Mock Up
Coral Gables, FL

DRAWN: LEN/MSB
DATE: 07/18/24
SCALE: See CS
CONTRACT NO. 54133
SHEET GLZ
REVISION R1

GLZ

HOPE'S SIMULATED DIVIDED MUNTINS, INTERNAL GRIDS AND END CUTS ARE ILLUSTRATED ON EACH DETAIL BELOW.
PLEASE ALSO REFRENCE HOPE'S RECOMMENDATIONS NOTED BELOW WHEN CONSIDERING GLASS OPTIONS FOR THE WINDOWS AND DOORS.

IMPORTANT CUSTOMER NOTE FOR CONSIDERATION:

GLASS PERIMETER SPACERS AND INTERNAL GRIDS ILLUSTRATED ON THE SUBMITTALS ARE FURNISHED BY OTHERS. NOTE THAT SPACER AND GRID SIZES AND COLORS VARY BETWEEN MANUFACTURERS. CONSULT WITH YOUR GLASS SUPPLIER TO SELECT THE SIZE AND COLOR OF THESE COMPONENTS. HOPE'S RECOMMENDS A COMPLETE GLASS SUBMITTAL, INCLUDING SAMPLES, BE PROVIDED BY THE GLASS SUPPLIER.

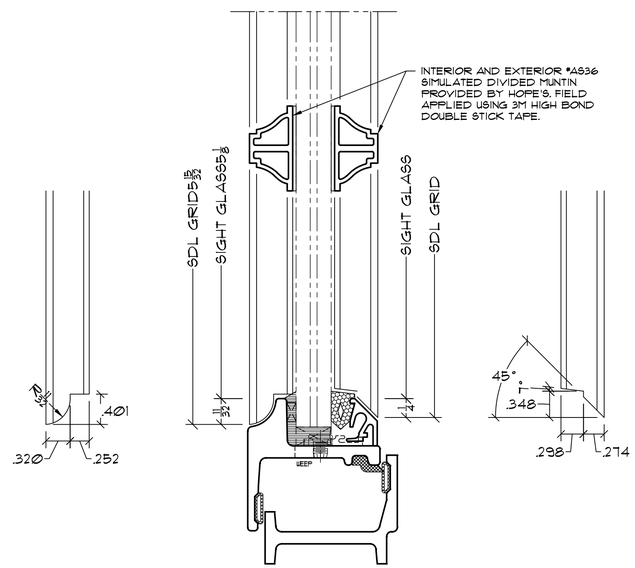

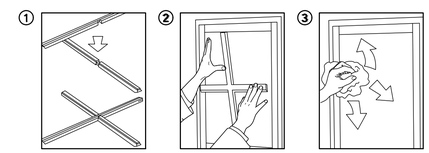

① Assemble the grid. Check fit of the grid to the glass (do not remove plastic liner).

② Make certain that the grid lays flat on the glass with a slight gap at the ends.

③ Prime / clean the glass per 3M online instructions. Wipe clean with a lint-free cloth.

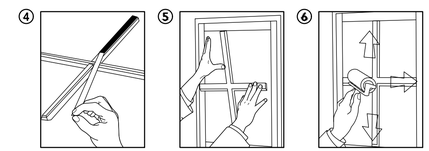

④ Wait one to three minutes to allow any risidual moisture to evaporate.

Carefully remove all plastic liners on the tape side of the grid.

⑤ Position the grid over the glass without touching the surface. (Two people can better accomplish this, especially with larger sizes.)

Very carefully, lower the grid to the glass surface.

⑥ Using the roller, apply moderate pressure (no more than 15 psi) and press all grid areas to the glass to improve adhesion.

Do not apply grid to glass unless 60°F or warmer for 72 continuous hours with low humidity. ONCE THE TAPE CONTACTS THE GLASS, THE GRID CANNOT BE REPOSITIONED OR REMOVED.

HOPE'S® WINDOWS, INC.
84 Hopkins Ave. / Jamestown, New York 14701
Phone: (716) 665-5124 ~ Fax: (716) 665-6903

PROJECT
Coral Gables City Hall – Mock Up
Coral Gables, FL

DRAWN: LEN
DATE: 07/19/24
SCALE: See CS
CONTRACT NO. 54133
SHEET SDL
REVISION R1

SDL

ELEVATIONS VIEWED FROM EXTERIOR UNLESS OTHERWISE NOTED

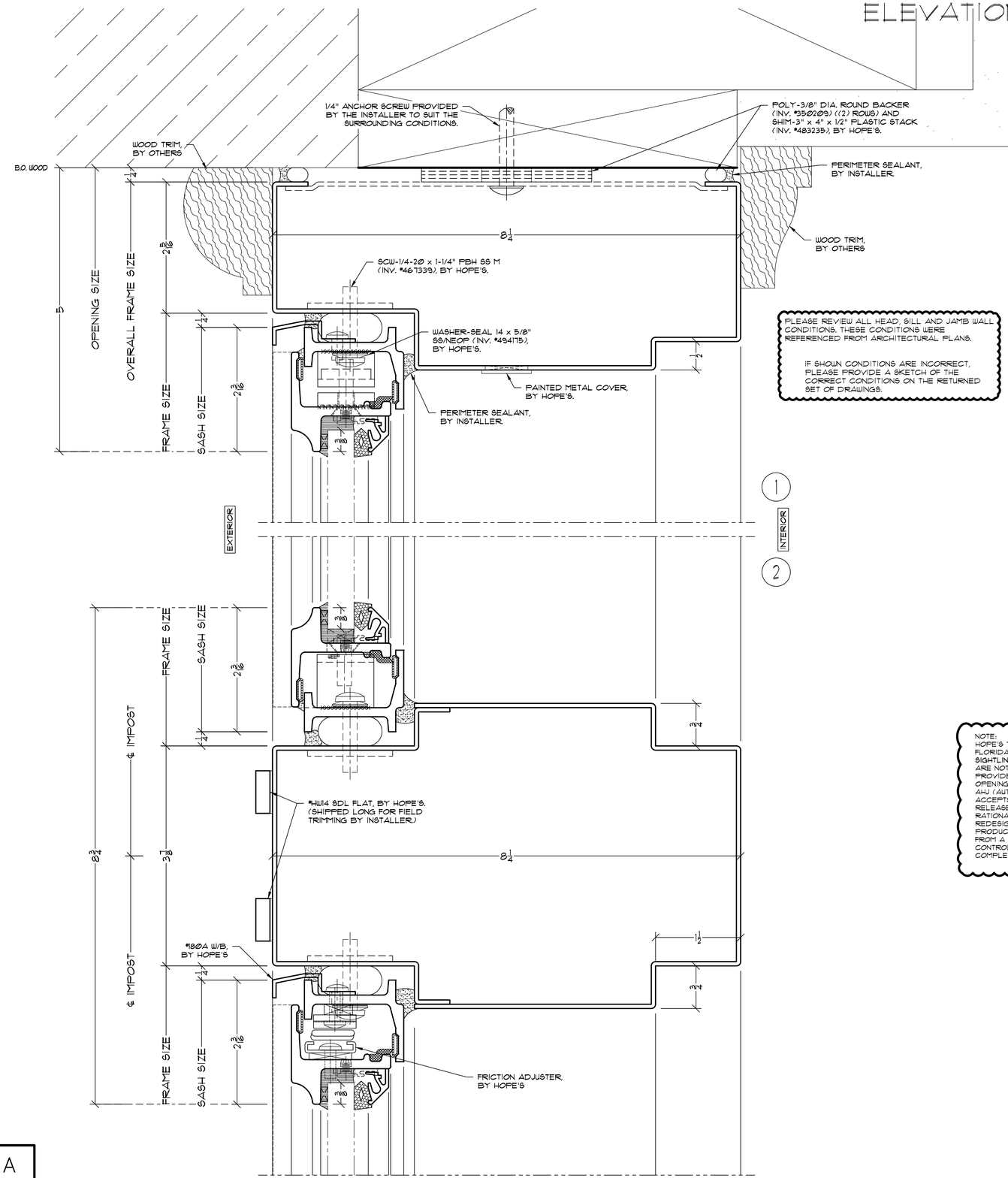

PLEASE REVIEW ALL HEAD, SILL AND JAMB WALL CONDITIONS. THESE CONDITIONS WERE REFERENCED FROM ARCHITECTURAL PLANS.

IF SHOWN CONDITIONS ARE INCORRECT, PLEASE PROVIDE A SKETCH OF THE CORRECT CONDITIONS ON THE RETURNED SET OF DRAWINGS.

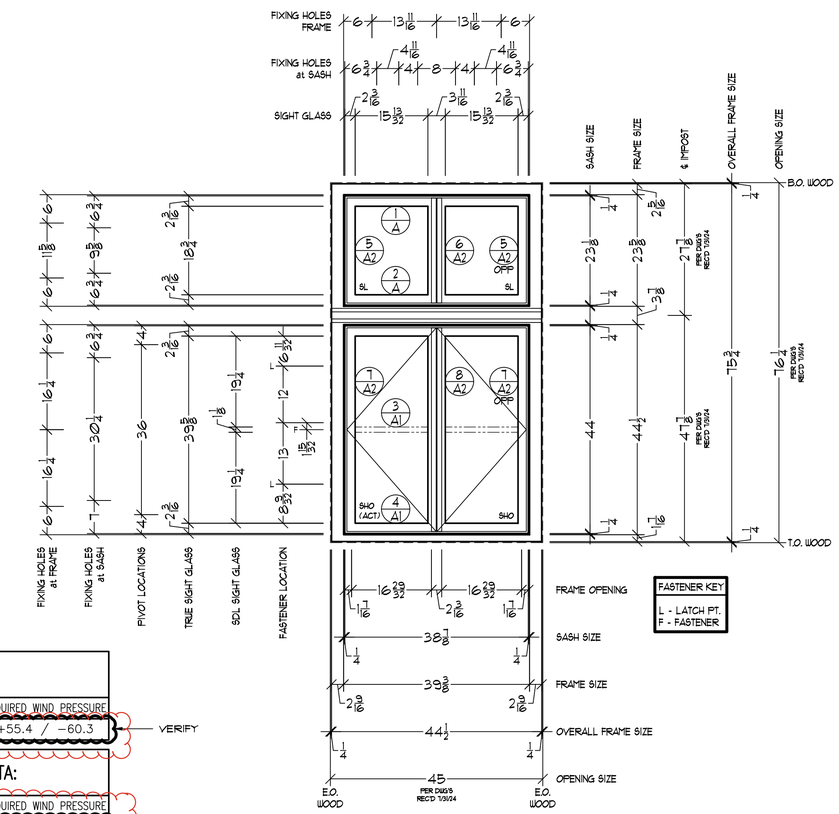

FASTENER KEY

L - LATCH PT.
F - FASTENER

1 REQ'D HOPE'S TYPE 'Q'
ARCHITECT'S TYPE '219, 224'

WINDOW DATA:

FL NUMBER	REQUIRED WIND PRESSURE
41166	+55.4 / -60.3

VERIFY

SUBFRAME DATA:

FL NUMBER	REQUIRED WIND PRESSURE
17093	+55.4 / -60.3

VERIFY

NOTE:
HOPE'S TYPE 'Q' DOES NOT CURRENTLY COMPLY WITH OUR FLORIDA STATE APPROVALS. THIS ELEVATION HAS SIGHTLINE CONSTRUCTION THAT HAS NOT BEEN TESTED AND ARE NOT SHOWN IN OUR APPROVALS. HOPE'S WILL PROVIDE RATIONAL ANALYSIS FROM A FLORIDA PE OF THIS OPENING FOR APPROVAL FROM THE LOCAL AHJ (AUTHORITY HAVING JURISDICTION). IF THE AHJ ACCEPTS THE RATIONAL ANALYSIS, TYPE 'Q' CAN BE RELEASED FOR PRODUCTION. IF THE AHJ REJECTS THE RATIONAL ANALYSIS, THIS OPENING WILL NEED TO BE REDESIGNED BEFORE IT CAN BE RELEASE FOR PRODUCTION. PLEASE NOTE THAT RATIONAL ANALYSIS FROM A 3RD PARTY FLORIDA PE IS OUTSIDE HOPE'S CONTROL. THIS CAN TAKE UP TO FOUR WEEKS TO BE COMPLETED DEPENDING ON THEIR WORKLOAD.

WINDOW HARDWARE FOR HOPE'S TYPE: Q WINDOW SERIES: OWS
WINDOW TYPE: DSHO HARDWARE FINISH: ORB - OIL RUBBED BRONZE

QTY	TYPE	PART NUMBER AND DESCRIPTION	SOURCE	FACTORY PREP DWG #
4	PIVOTS	#237S PIVOTS	HOPE'S	6968-R8
2	FASTENER	#101A SA FASTENER	HOPE'S	155-541-R3
2	ADJUSTER	#846 FRICTION ADJUSTER	AMC	155-529-R1
2	PULL	#178 PULL	HOPE'S	155-062-R1
–	–	–	–	–

THE ABOVE QUANTITIES ARE PER SASH, NOT TOTALED PER TYPE.

HOPE'S® WINDOWS, INC.
84 Hopkins Ave. / Jamestown, New York 14701
Phone: (716) 665-5124 ~ Fax: (716) 665-6903

PROJECT
Coral Gables City Hall – Mock Up
Coral Gables, FL

DRAWN: LEN/MSB
DATE: 07/18/24
SCALE: See CS
CONTRACT NO. 54133
SHEET A REVISION R1

A

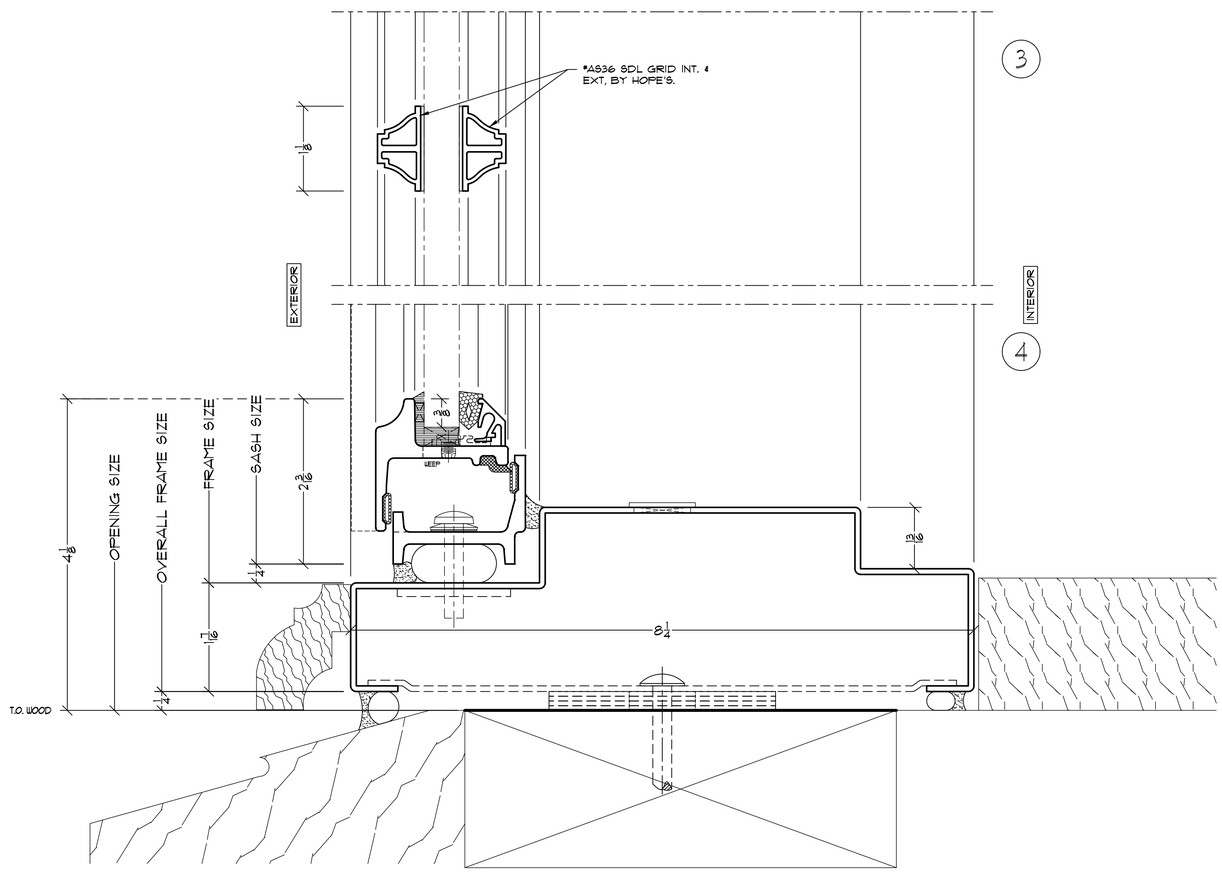

PLEASE REVIEW ALL HEAD, SILL AND JAMB WALL CONDITIONS. THESE CONDITIONS WERE REFERENCED FROM ARCHITECTURAL PLANS.

IF SHOWN CONDITIONS ARE INCORRECT, PLEASE PROVIDE A SKETCH OF THE CORRECT CONDITIONS ON THE RETURNED SET OF DRAWINGS.

HOPE'S® WINDOWS, INC.
84 Hopkins Ave. / Jamestown, New York 14701
Phone: (716) 665-5124 ~ Fax: (716) 665-6903

PROJECT
Coral Gables City Hall – Mock Up
Coral Gables, FL

DRAWN: LEN/MSB
DATE: 07/18/24
SCALE: See CS

CONTRACT NO. 54133
SHEET A1 REVISION R1

A1

PLEASE REVIEW ALL HEAD, SILL AND JAMB WALL CONDITIONS. THESE CONDITIONS WERE REFERENCED FROM ARCHITECTURAL PLANS.

IF SHOWN CONDITIONS ARE INCORRECT, PLEASE PROVIDE A SKETCH OF THE CORRECT CONDITIONS ON THE RETURNED SET OF DRAWINGS.

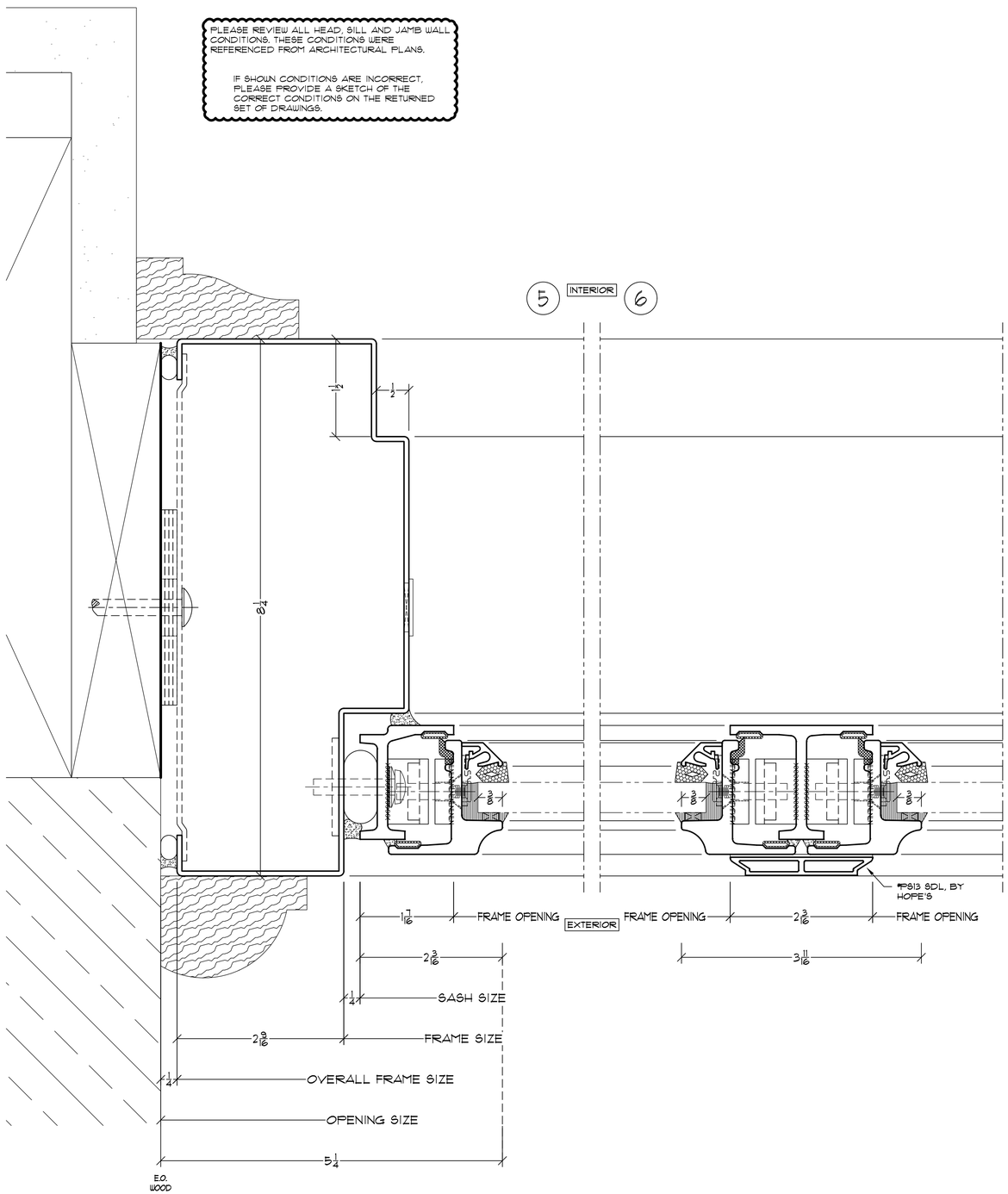

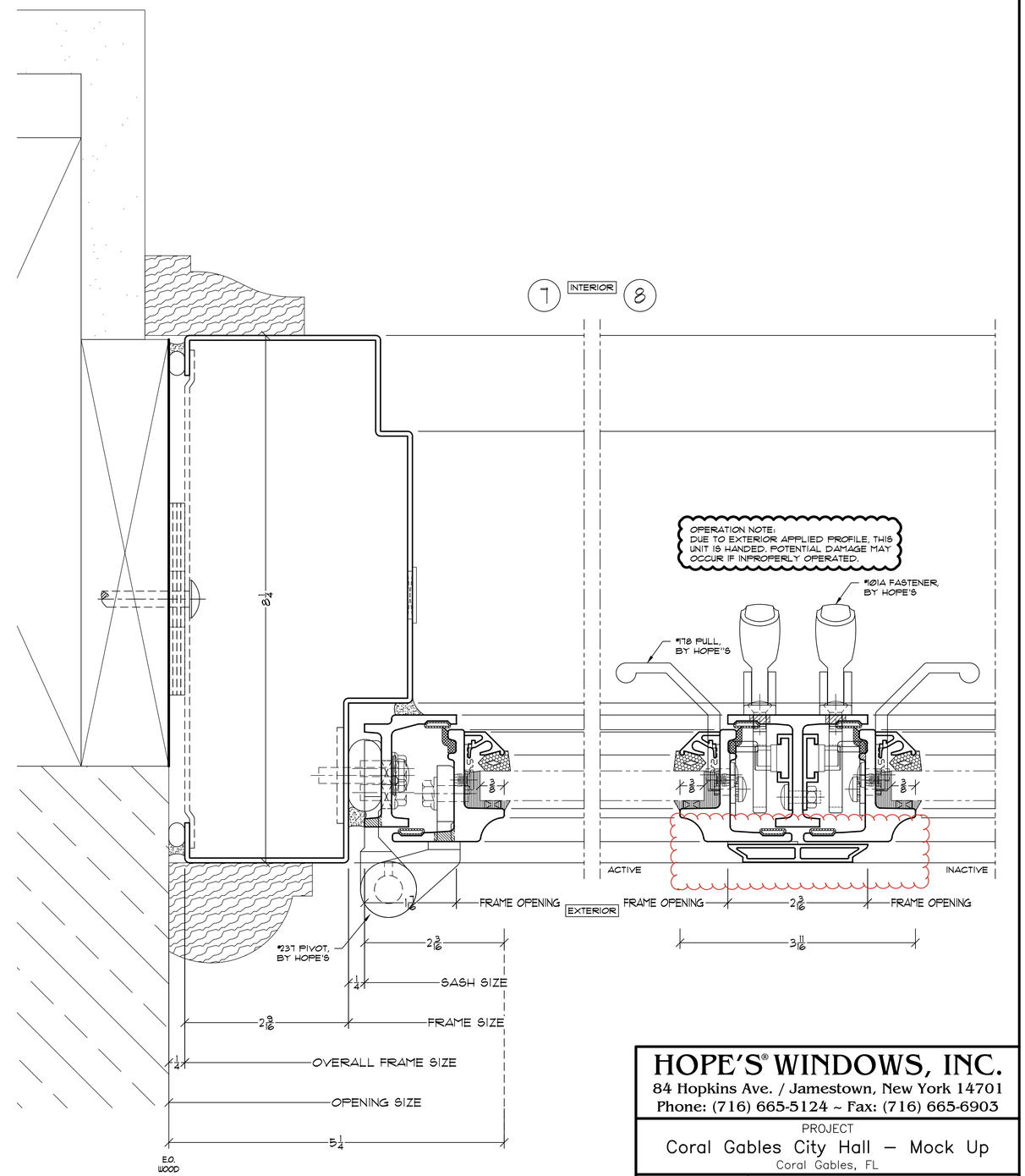

HOPE'S® WINDOWS, INC.
84 Hopkins Ave. / Jamestown, New York 14701
Phone: (716) 665-5124 ~ Fax: (716) 665-6903

PROJECT
Coral Gables City Hall – Mock Up
Coral Gables, FL

DRAWN: LEN/MSB
DATE: 07/18/24
SCALE: See CS

CONTRACT NO. 54133
SHEET A2 REVISION R1

A2

OLD WORLD SUITE OPTION #2

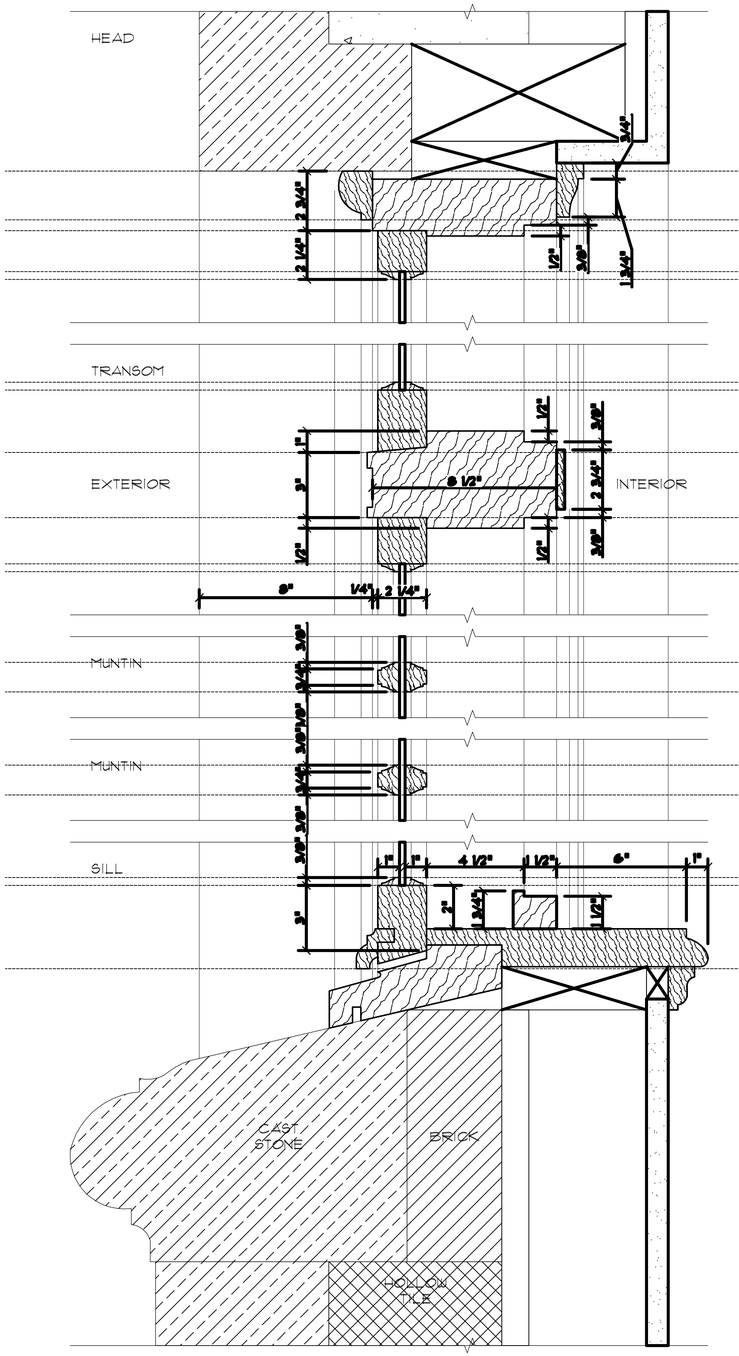

EXIST. WINDOW DETAIL
SCALE: 3" = 1'-0"

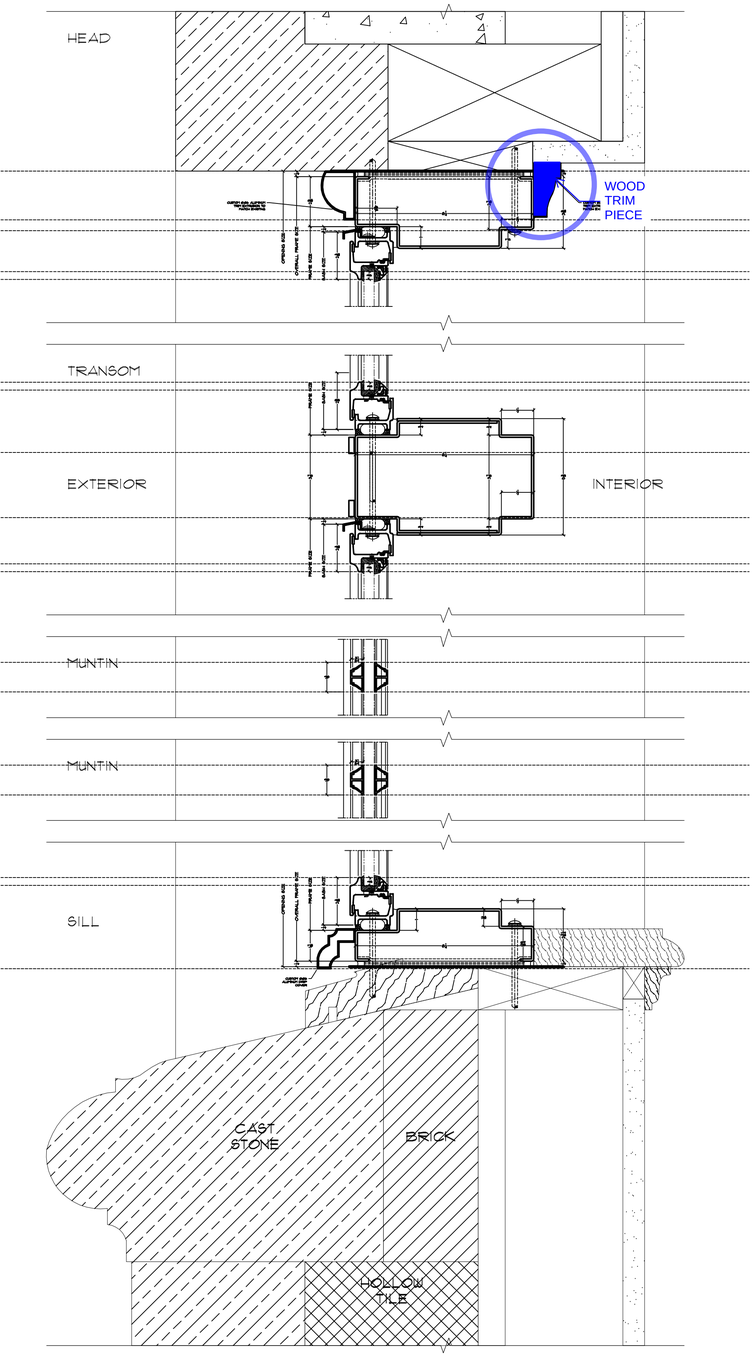

HOPE'S WINDOW DETAIL
SCALE: 3" = 1'-0"

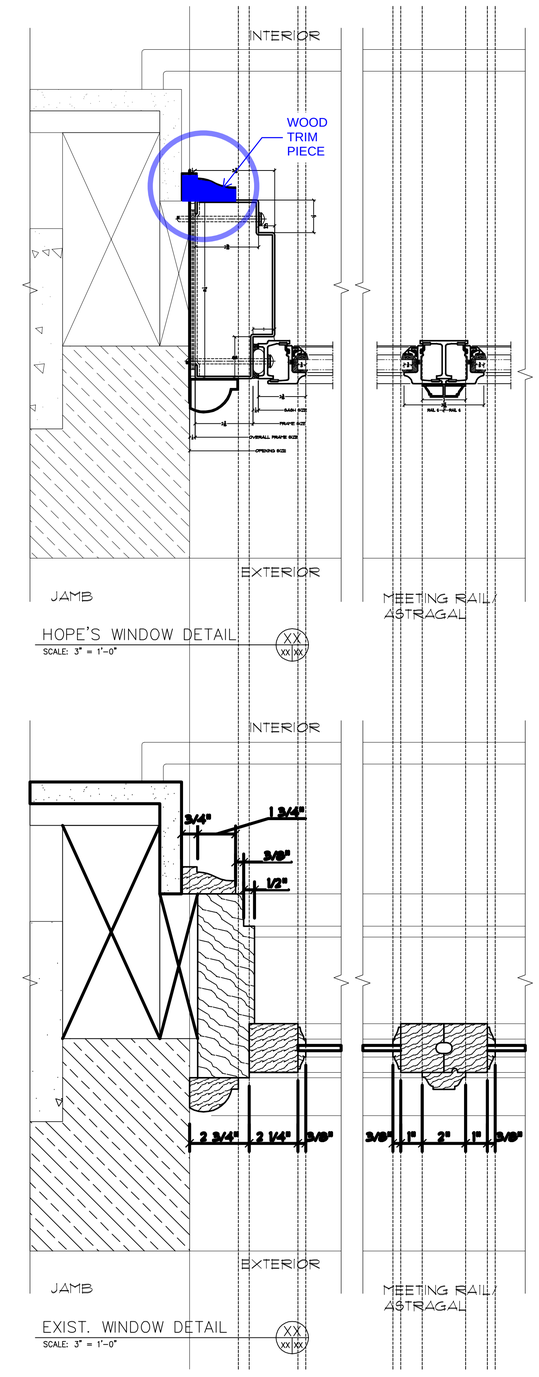

HOPE'S WINDOW DETAIL
SCALE: 3" = 1'-0"

EXIST. WINDOW DETAIL
SCALE: 3" = 1'-0"

ELEVATIONS VIEWED FROM EXTERIOR UNLESS OTHERWISE NOTED

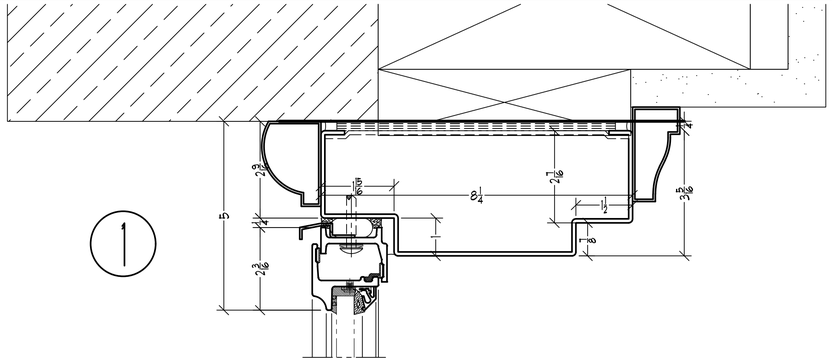

1

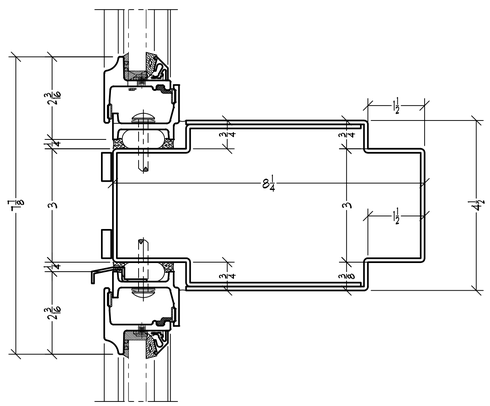

2

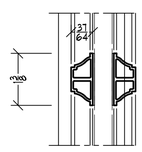

3

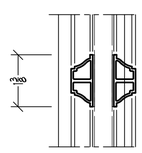

3

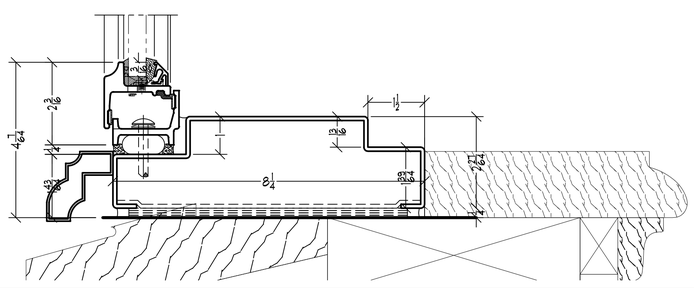

4

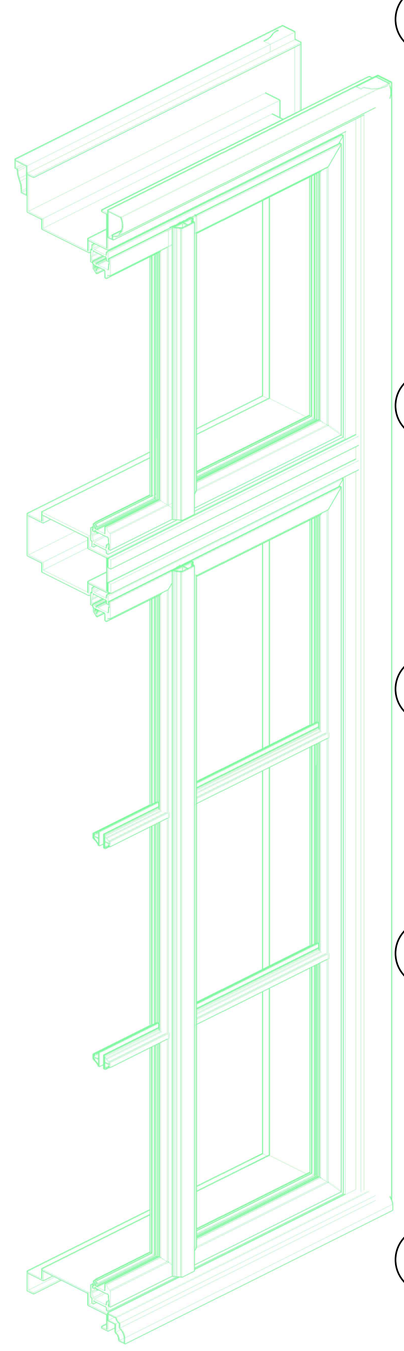

1

2

3

3

4

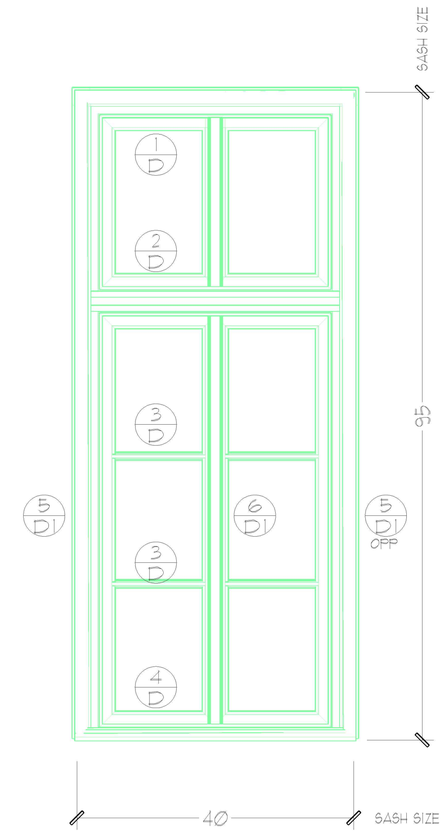

HOPE'S® WINDOWS, INC.
84 Hopkins Ave. / Jamestown, New York 14701
Phone: (716) 665-5124 ~ Fax: (716) 665-6903

PROJECT
Coral Gables City Hall

DRAWN: JPP
DATE: 12/6/23
SCALE: N.T.S.

CONTRACT NO.
SHEET D
REVISION

D

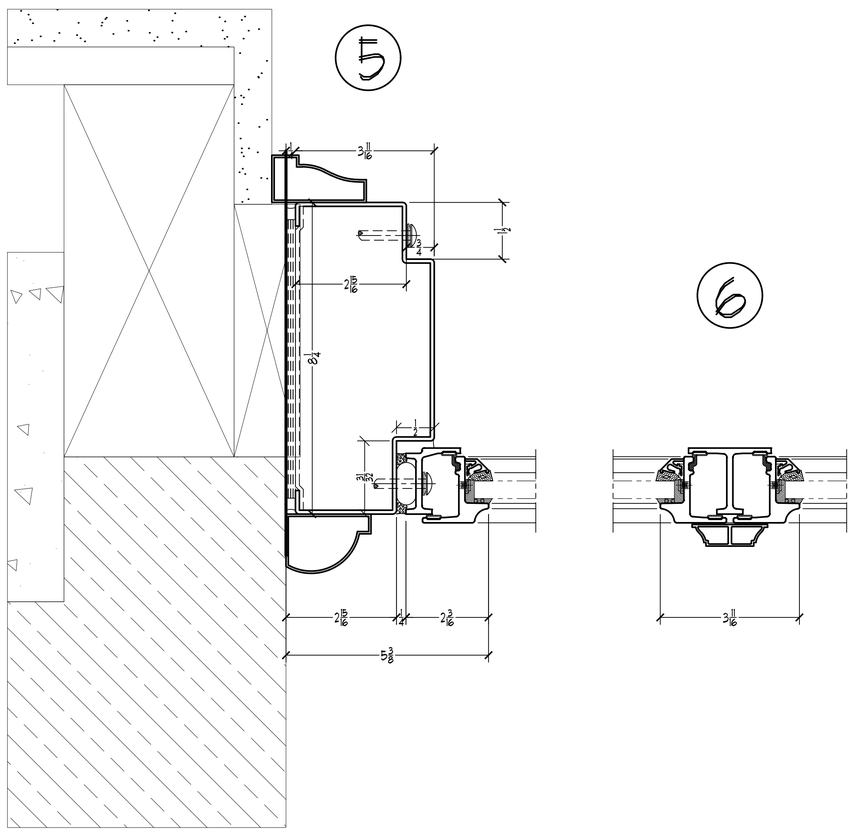

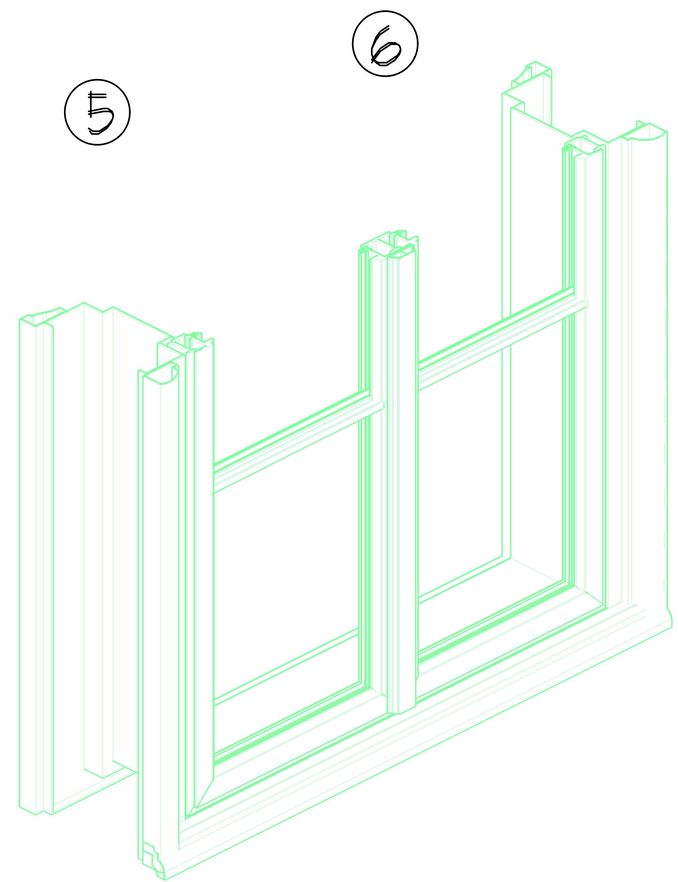

HOPE'S® WINDOWS, INC.
84 Hopkins Ave. / Jamestown, New York 14701
Phone: (716) 665-5124 ~ Fax: (716) 665-6903

PROJECT
Coral Gables City Hall

DRAWN: JPP
DATE: 12/6/23
SCALE: N.T.S.

CONTRACT NO.
SHEET D1 REVISION

D1

HOPE'S®
STEEL WINDOWS & DOORS
HANDCRAFTED IN USA

MATTHEWS

PAINT SAMPLE:

MP114038 CORAL GABLES CITY HALL
SV SATIN V1.0
54133 - CORAL GABLES CITY HALL
8/16/2024

R235909
GLOSS: 26.9
DFT: 2.09

Hope's Windows, Inc.
84 Hopkins Ave. • PO Box 580
Jamestown, NY 14702-0580
716.665.5124 • Fax: 716.665.3365

PPG/Matthews Paint
760 Pittsburgh Drive • Delaware, OH 43015
800.323.6593 • Fax: 800.947.0377

GENERAL NOTES:

1. THIS PRODUCT HAS BEEN TESTED, ANALYZED & APPROVED FOR DESIGN PRESSURES NOT TO EXCEED THOSE SHOWN IN THE "ALLOWABLE DESIGN PRESSURE TABLE(S)".
2. OPENINGS, BUCKING & BUCKING FASTENERS MUST BE PROPERLY DESIGNED & INSTALLED TO TRANSFER WIND LOADS TO THE STRUCTURE.
3. ALL HARDWARE & FASTENERS SHALL BE IN ACCORDANCE WITH THESE DRAWINGS & SHALL NOT VARY UNLESS SPECIFICALLY MENTIONED ON THE DRAWINGS. SPECIFIED ANCHOR EMBED TO BASE MATERIAL SHALL BE BEYOND WALL FINISH OR STUCCO.
4. THIS PRODUCT HAS BEEN DESIGNED IN ACCORDANCE WITH AND MEETS THE REQUIREMENTS OF THE FLORIDA BUILDING CODE (FBC) INCLUDING HIGH VELOCITY HURRICANE ZONES (HVHZ) & IS LARGE MISSILE IMPACT RATED.
5. IMPACT SHUTTERS ARE NOT REQUIRED WITH THIS PRODUCT.
6. ALL ANCHORS SECURING PRODUCT FRAMES TO PRESSURE TREATED BUCKS OR WOOD FRAMING SHALL BE CAPABLE OF RESISTING CORROSION CAUSED BY THE PRESSURE TREATING CHEMICALS IN THE WOOD.
7. DETERMINE THE POSITIVE & NEGATIVE DESIGN LOADS TO USE WHEN REFERENCING THESE DOCUMENTS IN ACCORDANCE WITH THE GOVERNING CODE AND GOVERNING WIND VELOCITY. FOR WIND LOAD CALCULATIONS IN ACCORDANCE WITH THE FLORIDA BUILDING CODE, A DIRECTIONALITY FACTOR OF Kd = 0.85 MAY BE APPLIED PER THE ASCE-7 STANDARD.
8. MATERIALS, INCLUDING BUT NOT LIMITED TO STEEL SCREWS, THAT COME INTO CONTACT WITH OTHER DISSIMILAR MATERIALS SHALL MEET THE REQUIREMENTS OF FLORIDA BUILDING CODE.
9. TO THE BEST OF OUR KNOWLEDGE, THE PRODUCT SHOWN HEREIN IS QUALITY ASSURED BY A FLORIDA STATE APPROVED CERTIFICATION/QA ENTITY & SHALL BE LABELED IN ACCORDANCE WITH THE FBC AND THE FLORIDA DEPARTMENT OF BUSINESS & PROFESSIONAL REGULATION SPECIFICATIONS. THESE DRAWINGS SHOW ALL APPLICABLE ELEVATION, COMBINATION, INSTALLATION & COMPARATIVE ANALYSIS CONDITIONS AS DETERMINED THROUGH TESTING & ENGINEERING RATIONAL ANALYSIS. PRODUCT ASSEMBLY SHALL BE IN ACCORDANCE WITH THESE DRAWINGS, THE MANUFACTURER'S QUALITY ASSURANCE SPECIFICATIONS & TESTING REPORTS.
10. CERTIFICATION OF THIS PRODUCT SHALL BE CONSIDERED VOID IF IT IS INSTALLED WITHOUT A BUILDING PERMIT FROM THE APPLICABLE LOCAL BUILDING DEPARTMENT OR IF IT IS INSTALLED BY ANYONE OTHER THAN A LICENSED CONTRACTOR EXPERIENCED WITH INSTALLATIONS OF THIS TYPE OF PRODUCT.

CORNER CONSTRUCTION:

FRAME: MITER CUT, BUTTED AND FULLY WELDED

EVALUATION OF THIS PRODUCT IS BASED ON APPLICABLE STANDARDS AND/OR INFORMATION & RESULTS FROM APPLICABLE TEST REPORTS. THE FLORIDA BUILDING CODE VERSION CONSIDERED WITH THIS EVALUATION WAS THAT IN FORCE AT THE TIME OF THE EVALUATION. IN THE EVENT OF CODE VERSION CHANGES/UPDATES OR IN THE EVENT THAT NEW OR ADDITIONAL TESTING IS COMPLETED ON THIS PRODUCT, PRIOR TO STATING CODE COMPLIANCE WITH THE STATE, THE MANUFACTURER SHALL CONFIRM WITH THE EVALUATION ENGINEER OF RECORD THAT EVERYTHING SPECIFIED HERE-IN IS CURRENT WITH ALL CURRENT TESTING, CODES AND APPLICABLE STANDARDS.

APPROVED SHAPES

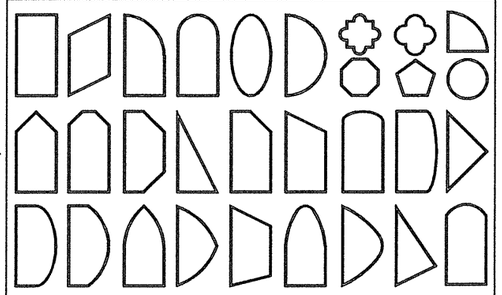

NOTES:
1. OTHER SHAPES MAY APPLY PROVIDING THEY ARE SIMILAR TO THOSE SHOWN & HAVE CORNER CONSTRUCTION AS DESCRIBED IN THIS DRAWING.
2. ALL SHAPED UNITS MUST FIT INSCRIBED INTO THE ALLOWABLE RECTANGULAR UNITS & BE GOVERNED BY THE ALLOWABLE PRESSURE OF THE RESPECTIVE RECTANGULAR UNIT.

FRAME ANCHOR REQUIREMENTS TABLE

OPENING TYPE (SUBSTRATE)	FRAME/CLIP TO OPENING FASTENER TYPE	MINIMUM EMBED	MINIMUM EDGE DIST.
FRAME SCREWS			
MIN. 2X4 WOOD FRAME OR BUCK (MIN. GR. 3 & G=0.55)	NO. 14 SMS OR WOOD SCREW	1 1/4"	3/4"
MIN. 18 GA. 33 KSI METAL STUD	1/4-20 GR. 5 SELF TAP/DRILL SCREW	FULL	1/2"
MIN. 1/8" THK A36 STEEL	1/4-20 GR. 5 SELF TAP/DRILL SCREW	FULL	1/2"
MIN. 1/8" THK 6063-T5 ALUM.	1/4-20 GR. 5 SELF TAP/DRILL SCREW	FULL	1/2"
MIN. C-90 CMU OR 2500 PSI CONCRETE	(1) 1/4" CONCRETE SCREW	1 1/4"	2"
INSTALLATION CLIP SCREWS			
MIN. 2X4 WOOD FRAME OR BUCK (MIN. GR. 3 & G=0.55)	NO. 14 SMS OR WOOD SCREW	1 3/8"	1/2"
MIN. 18 GA. 33 KSI METAL STUD	1/4-20 GR. 5 SELF TAP/DRILL SCREW	FULL	1/2"
MIN. 1/8" THK A36 STEEL	1/4-20 GR. 5 SELF TAP/DRILL SCREW	FULL	1/2"
MIN. 1/8" THK 6063-T5 ALUM.	1/4-20 GR. 5 SELF TAP/DRILL SCREW	FULL	1/2"
MIN. C-90 CMU OR 2500 PSI CONCRETE	(1) 1/4" CONCRETE SCREW	1 1/4"	2"

(1) CONCRETE SCREWS SHALL BE ELCO ULTRACONS (C.S.), ELCO CRETE-FLEX (S.S.), ITW RAMSET/RED HEAD TAPCONS (C.S. OR S.S.) OR HILTI KWIK-CON II (C.S OR S.S.).

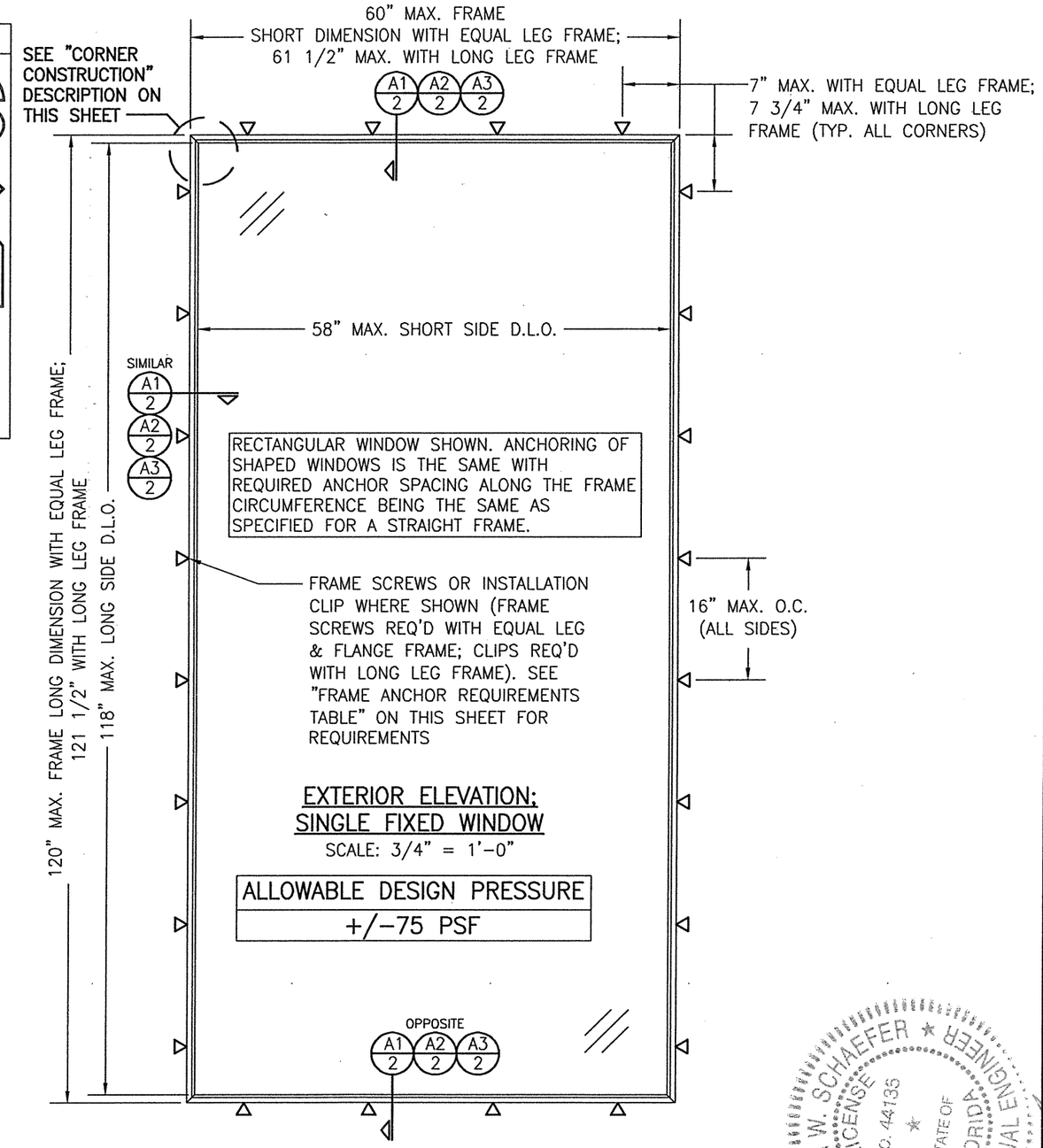

EXTERIOR ELEVATION;
SINGLE FIXED WINDOW
SCALE: 3/4" = 1'-0"

ALLOWABLE DESIGN PRESSURE
+/-75 PSF

WARREN W. SCHAEFER LICENSE No. 44135 STATE OF FLORIDA PROFESSIONAL ENGINEER

THESE DRAWINGS ARE APPLICABLE ONLY TO THE PRODUCT SPECIFIED. THEY MAY NOT BE USED FOR THE ASSEMBLY AND/OR INSTALLATION OF ANY OTHER PRODUCT NOR MAY THEY BE USED FOR RATIONAL AND/OR LOCAL APPROVAL OF ANY PRODUCT NOT PRODUCED BY THE MANUFACTURER STATED ON THESE DRAWINGS.

DRAWN BY: W.W.S.	CHECKED BY: W.W.S.
PLOT: 1=16	DATE: 10/07/21

NO.	REVISION DESCRIPTION	BY	DATE
A1	CHANGE PRODUCT NAME	W.W.S.	01/19/22

DRAWING TITLE: OLD WORLD SUITE IMPACT FIXED DIRECT GLAZE WINDOWS

MANUFACTURER: HOPE'S WINDOWS, INC.
84 HOPKINS AVENUE
JAMESTOWN, NY 14702
(716) 665-5124

CONSULTANTS: W. W. SCHAEFER ENGINEERING & CONSULTING, P.A. (CA 6809)
7480 150TH COURT NORTH
PALM BEACH GARDENS, FL 33418
PHONE: 561-744-3424

CERTIFICATION: JAN 19 2022
WARREN W. SCHAEFER, P.E.
P.E. NO. 44135

DRAWING NO. 2005 REV. A

SHEET NO. 1 OF 3

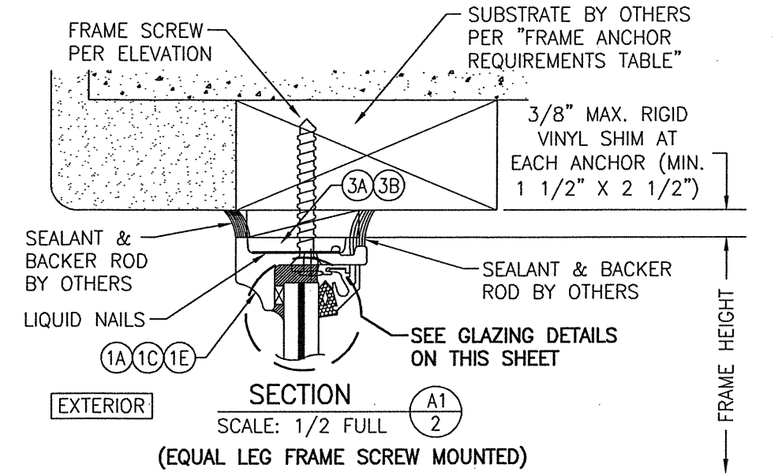

SECTION A1/2
SCALE: 1/2 FULL
(EQUAL LEG FRAME SCREW MOUNTED)

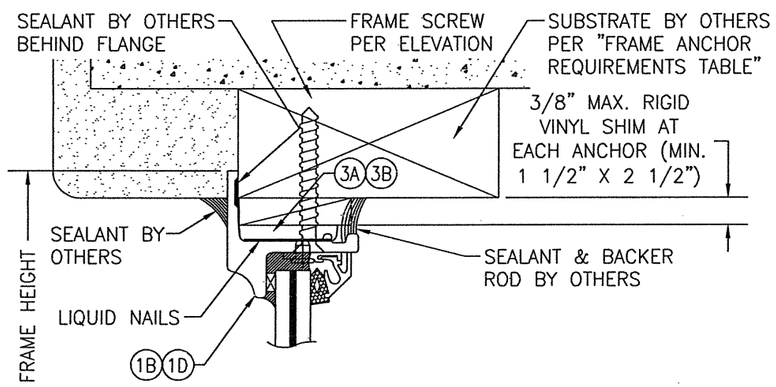

SECTION A2/2
SCALE: 1/2 FULL
(LONG LEG FRAME FLANGE MOUNTED)

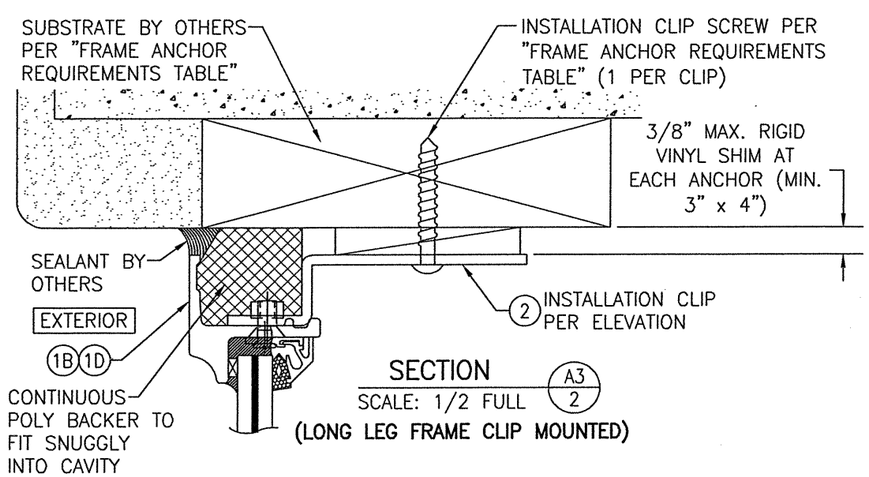

SECTION A3/2
SCALE: 1/2 FULL
(LONG LEG FRAME CLIP MOUNTED)

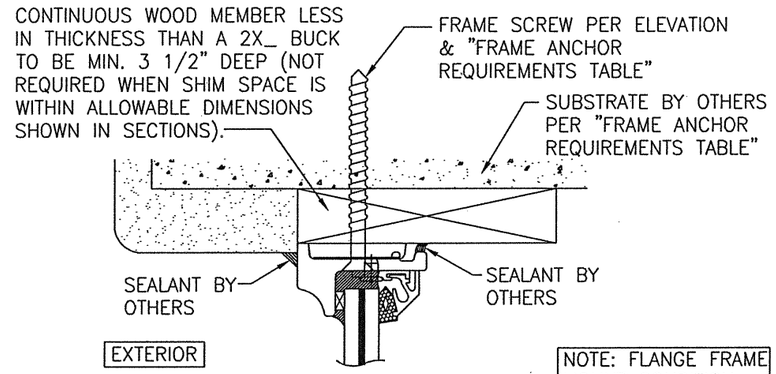

OPTIONAL DIRECT MOUNT DETAIL TO SUBSTRATE WITH SPACER

(HEAD SECTION SHOWN; SILL & SIDES ARE INSTALLED THE SAME)
(FOR DETAIL NOT SHOWN, SEE OTHER SECTIONS)

NOTE: FLANGE FRAME MOUNT CONDITION ALSO MAY APPLY TO THIS DIRECT MOUNT CONDITION.

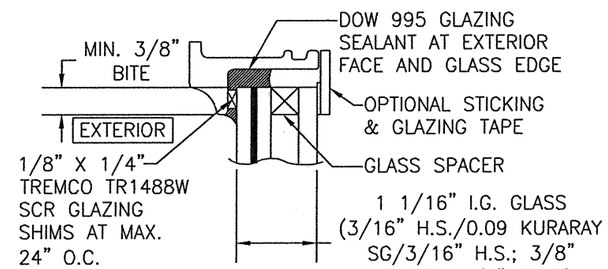

GLAZING DETAIL: I.G. GLASS WITH FRAME PART NO. 1A & 1B

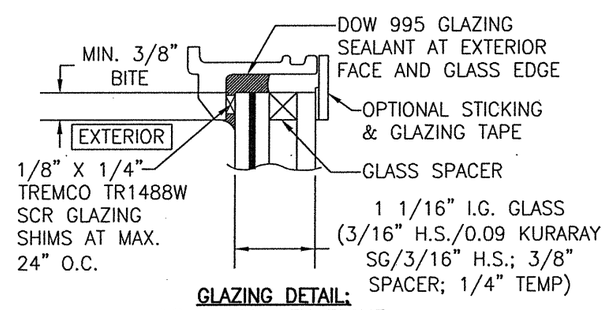

GLAZING DETAIL: I.G. GLASS WITH FRAME PART NO. 1C & 1D

GLAZING NOTE: AT BASE OF GLASS, 4" LONG SILICONE SETTING BLOCKS SHALL BE PLACED AT MAX. 24" O.C. (QTY. OF 2 MIN.). WIDTH & THICKNESS OF BLOCKS SHALL BE AS REQUIRED TO MATCH THE GLASS SECTION THICKNESS AND DEPTH OF SPACE AT GLASS EDGE.

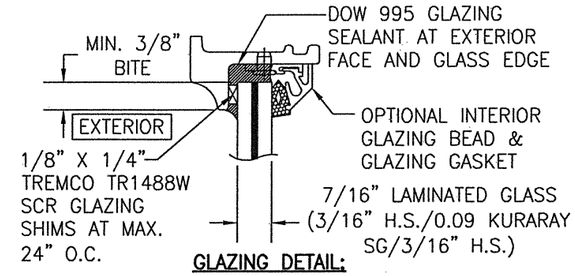

GLAZING DETAIL: MONOLITHIC GLASS WITH FRAME PART NO. 1A & 1B

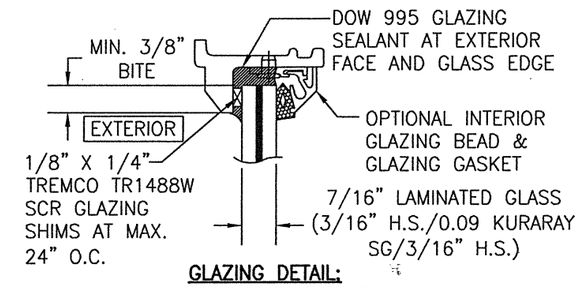

GLAZING DETAIL: MONOLITHIC GLASS WITH FRAME PART NO. 1C & 1D

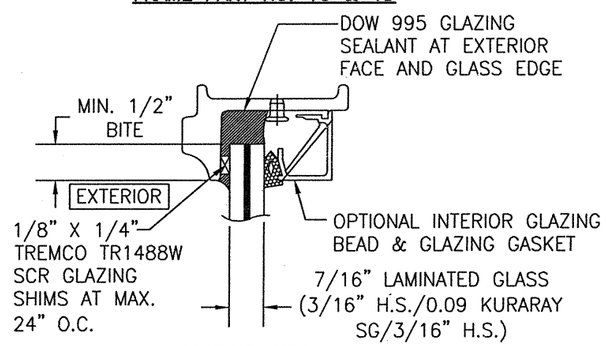

GLAZING DETAIL: MONOLITHIC GLASS WITH FRAME PART NO. 1E

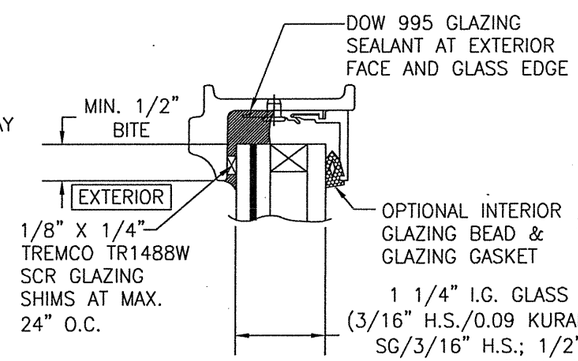

GLAZING DETAIL: I.G. GLASS WITH FRAME PART NO. 1E

DRAWN BY: W.W.S.	CHECKED BY: W.W.S.
PLOT: 1=2	DATE: 10/07/21

NO.	REVISION DESCRIPTION	BY	DATE

DRAWING TITLE: OLD WORLD SUITE IMPACT FIXED DIRECT GLAZE WINDOW

MANUFACTURER: HOPE'S WINDOWS, INC. 84 HOPKINS AVENUE JAMESTOWN, NY 14702 (716) 665-5124

CONSULTANTS: W. W. SCHAEFER ENGINEERING & CONSULTING, P.A. (CA 6809) 7480 150TH COURT NORTH PALM BEACH GARDENS, FL 33418 PHONE: 561-744-3424

CERTIFICATION: WARREN W. SCHAEFER P.E. NO. 44135 — WARREN W. SCHAEFER LICENSE No. 44135 STATE OF FLORIDA PROFESSIONAL ENGINEER — JAN 19 2022

WARREN W. SCHAEFER, P.E.

DRAWING NO. 2005 REV. A

SHEET NO. 2 OF 3

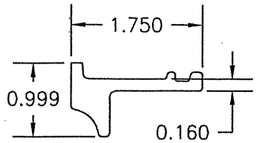

(1A) EQUAL LEG FRAME

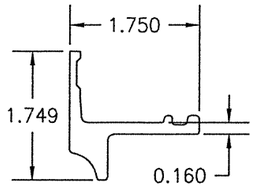

(1B) LONG LEG FRAME

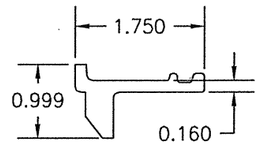

(1C) EQUAL LEG FRAME

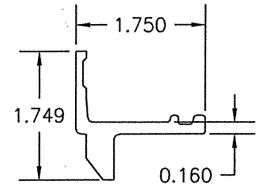

(1D) LONG LEG FRAME

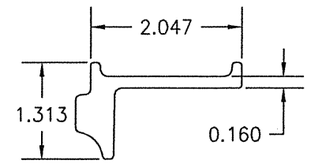

(1E) EQUAL LEG FRAME

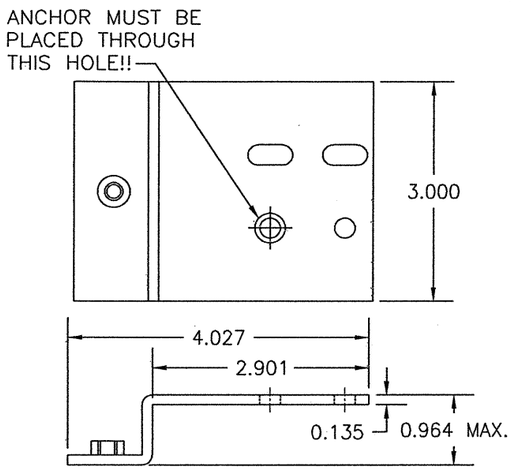

(2) INSTALLATION CLIP

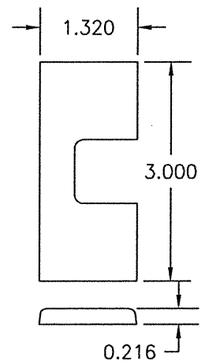

(3A) FIXING HOLE FILLER SHIM
(USED WITH FRAME PART NO. 1A, 1B, 1C & 1D)

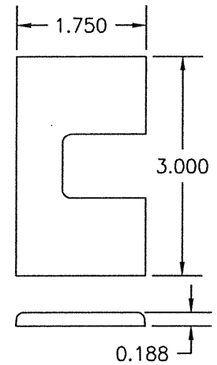

(3B) FIXING HOLE FILLER SHIM
(USED WITH FRAME PART NO. 1E)

DRAWN BY: W.W.S.	CHECKED BY: W.W.S.
PLOT: 1=2	DATE: 10/07/21

NO.	REVISION DESCRIPTION	BY	DATE

DRAWING TITLE
OLD WORLD SUITE IMPACT FIXED DIRECT GLAZE WINDOW

MANUFACTURER
HOPE'S WINDOWS, INC.
84 HOPKINS AVENUE
JAMESTOWN, NY 14702
(716) 665-5124

CONSULTANTS
W. W. SCHAEFER ENGINEERING & CONSULTING, P.A. (CA 6809)
7480 150TH COURT NORTH
PALM BEACH GARDENS, FL 33418
PHONE: 561-744-3424

CERTIFICATION
JAN 18 2022
WARREN W. SCHAEFER, P.E.
P.E. NO. 44135

WARREN W. SCHAEFER ★ LICENSE No. 44135 ★ STATE OF FLORIDA ★ PROFESSIONAL ENGINEER

DRAWING NO. 2005 REV. A

SHEET NO. 3 OF 3

GENERAL NOTES:

1. THIS PRODUCT HAS BEEN TESTED, ANALYZED & APPROVED FOR DESIGN PRESSURES NOT TO EXCEED THOSE SHOWN IN THE "ALLOWABLE DESIGN PRESSURE TABLE(S)".
2. OPENINGS, BUCKING & BUCKING FASTENERS MUST BE PROPERLY DESIGNED & INSTALLED TO TRANSFER WIND LOADS TO THE STRUCTURE.
3. ALL HARDWARE & FASTENERS SHALL BE IN ACCORDANCE WITH THESE DRAWINGS & SHALL NOT VARY UNLESS SPECIFICALLY MENTIONED ON THE DRAWINGS. SPECIFIED ANCHOR EMBED TO BASE MATERIAL SHALL BE BEYOND WALL FINISH OR STUCCO.
4. THIS PRODUCT HAS BEEN DESIGNED IN ACCORDANCE WITH AND MEETS THE REQUIREMENTS OF THE FLORIDA BUILDING CODE (FBC) INCLUDING HIGH VELOCITY HURRICANE ZONES (HVHZ) & IS LARGE MISSILE IMPACT RATED.
5. IMPACT SHUTTERS ARE NOT REQUIRED WITH THIS PRODUCT.
6. ALL ANCHORS SECURING PRODUCT FRAMES TO PRESSURE TREATED BUCKS OR WOOD FRAMING SHALL BE CAPABLE OF RESISTING CORROSION CAUSED BY THE PRESSURE TREATING CHEMICALS IN THE WOOD.
7. DETERMINE THE POSITIVE & NEGATIVE DESIGN LOADS TO USE WHEN REFERENCING THESE DOCUMENTS IN ACCORDANCE WITH THE GOVERNING CODE AND GOVERNING WIND VELOCITY. FOR WIND LOAD CALCULATIONS IN ACCORDANCE WITH THE FLORIDA BUILDING CODE, A DIRECTIONALITY FACTOR OF Kd = 0.85 MAY BE APPLIED PER THE ASCE-7 STANDARD.
8. MATERIALS, INCLUDING BUT NOT LIMITED TO STEEL SCREWS, THAT COME INTO CONTACT WITH OTHER DISSIMILAR MATERIALS SHALL MEET THE REQUIREMENTS OF FLORIDA BUILDING CODE.
9. TO THE BEST OF OUR KNOWLEDGE, THE PRODUCT SHOWN HEREIN IS QUALITY ASSURED BY A FLORIDA STATE APPROVED CERTIFICATION/QA ENTITY & SHALL BE LABELED IN ACCORDANCE WITH THE FBC AND THE FLORIDA DEPARTMENT OF BUSINESS & PROFESSIONAL REGULATION SPECIFICATIONS. THESE DRAWINGS SHOW ALL APPLICABLE ELEVATION, COMBINATION, INSTALLATION & COMPARATIVE ANALYSIS CONDITIONS AS DETERMINED THROUGH TESTING & ENGINEERING RATIONAL ANALYSIS. PRODUCT ASSEMBLY SHALL BE IN ACCORDANCE WITH THESE DRAWINGS, THE MANUFACTURER'S QUALITY ASSURANCE SPECIFICATIONS & TESTING REPORTS.
10. CERTIFICATION OF THIS PRODUCT SHALL BE CONSIDERED VOID IF IT IS INSTALLED WITHOUT A BUILDING PERMIT FROM THE APPLICABLE LOCAL BUILDING DEPARTMENT OR IF IT IS INSTALLED BY ANYONE OTHER THAN A LICENSED CONTRACTOR EXPERIENCED WITH INSTALLATIONS OF THIS TYPE OF PRODUCT.

CORNER CONSTRUCTION:

FRAME & SASH: MITER CUT, BUTTED AND FULLY WELDED

EVALUATION OF THIS PRODUCT IS BASED ON APPLICABLE STANDARDS AND/OR INFORMATION & RESULTS FROM APPLICABLE TEST REPORTS. THE FLORIDA BUILDING CODE VERSION CONSIDERED WITH THIS EVALUATION WAS THAT IN FORCE AT THE TIME OF THE EVALUATION. IN THE EVENT OF CODE VERSION CHANGES/UPDATES OR IN THE EVENT THAT NEW OR ADDITIONAL TESTING IS COMPLETED ON THIS PRODUCT, PRIOR TO STATING CODE COMPLIANCE WITH THE STATE, THE MANUFACTURER SHALL CONFIRM WITH THE EVALUATION ENGINEER OF RECORD THAT EVERYTHING SPECIFIED HERE-IN IS CURRENT WITH ALL CURRENT TESTING, CODES AND APPLICABLE STANDARDS.

LOCK REQUIREMENTS (MULTI-POINT SIDE LOCK)

MAXIMUM FRAME HEIGHT	QUANTITY PER PANEL
EQUAL LEG FRAME	
96"	5
85"	4
66"	3
47"	2
LONG LEG FRAME	
97 1/2"	5
86 1/2"	4
67 1/2"	3
48 1/2"	2

MULTI-POINT LOCK NOTES:
1) SPACING BETWEEN LOCK POINTS MAY NOT EXCEED 24".

(1)HINGE REQUIREMENTS

HINGE CENTERS SHALL BE LOCATED APPROXIMATELY 4" FROM TOP & BOTTOM OF FRAME AND SPACED 30 1/2" MAX. O.C. BETWEEN.

(1) WHEN LONG LEG FRAME IS USED, HINGE CENTER DISTANCE FROM TOP & BOTTOM OF FRAME INCREASES TO APPROXIMATELY 4 3/4"

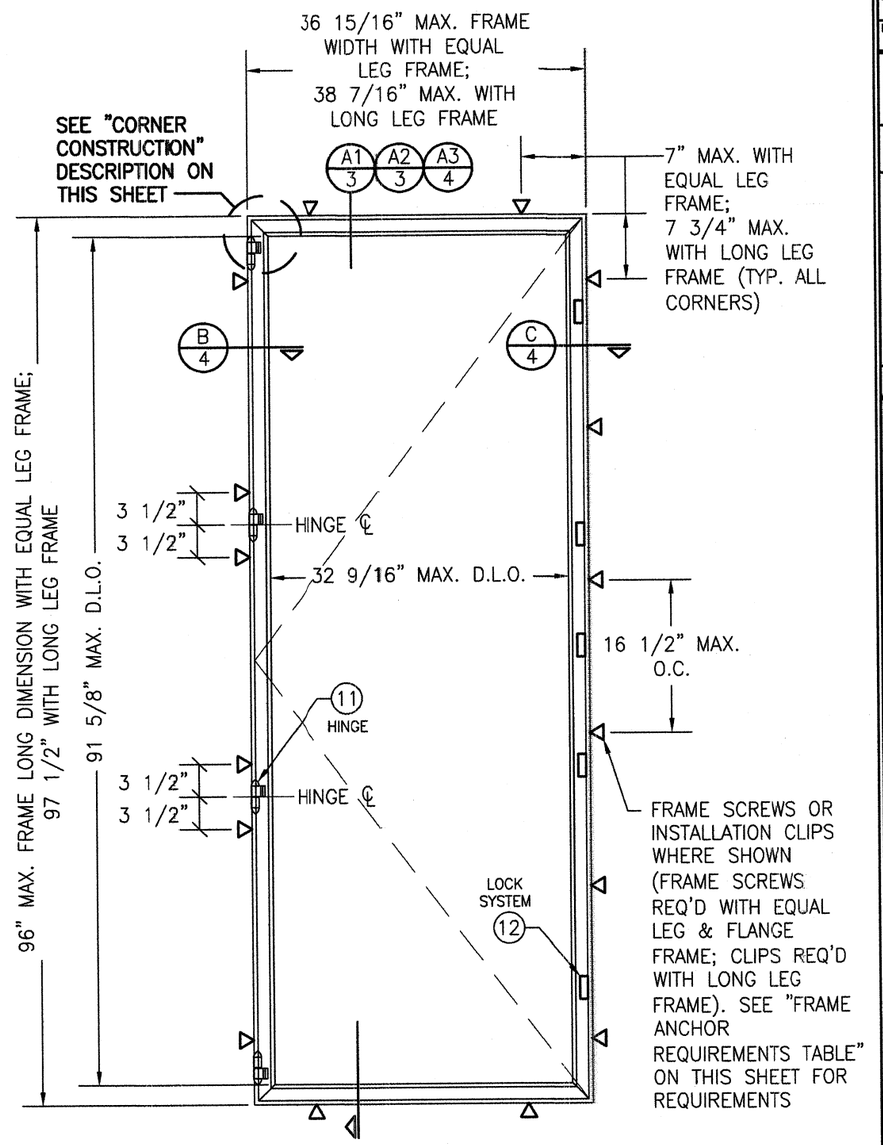

EXTERIOR ELEVATION: SINGLE CASEMENT WINDOW

SCALE: 3/4" = 1'-0"

ALLOWABLE DESIGN PRESSURE (SINGLE WINDOWS)
+/-70 PSF

FRAME ANCHOR REQUIREMENTS TABLE

OPENING TYPE (SUBSTRATE)	FRAME/CLIP TO OPENING FASTENER TYPE	MINIMUM EMBED	MINIMUM EDGE DIST.
FRAME SCREWS			
MIN. 2X4 WOOD FRAME OR BUCK (MIN. GR. 3 & G=0.55)	NO. 14 SMS OR WOOD SCREW	1 1/4"	3/4"
MIN. 18 GA. 33 KSI METAL STUD	1/4-20 GR. 5 SELF TAP/DRILL SCREW	FULL	1/2"
MIN. 1/8" THK A36 STEEL	1/4-20 GR. 5 SELF TAP/DRILL SCREW	FULL	1/2"
MIN. 1/8" THK 6063-T5 ALUM.	1/4-20 GR. 5 SELF TAP/DRILL SCREW	FULL	1/2"
MIN. C-90 CMU OR 2500 PSI CONCRETE	(1) 1/4" CONCRETE SCREW	1 1/4"	2"
INSTALLATION CLIP SCREWS			
MIN. 2X4 WOOD FRAME OR BUCK (MIN. GR. 3 & G=0.55)	NO. 14 SMS OR WOOD SCREW	1 3/8"	1/2"
MIN. 18 GA. 33 KSI METAL STUD	1/4-20 GR. 5 SELF TAP/DRILL SCREW	FULL	1/2"
MIN. 1/8" THK A36 STEEL	1/4-20 GR. 5 SELF TAP/DRILL SCREW	FULL	1/2"
MIN. 1/8" THK 6063-T5 ALUM.	1/4-20 GR. 5 SELF TAP/DRILL SCREW	FULL	1/2"
MIN. C-90 CMU OR 2500 PSI CONCRETE	(1) 1/4" CONCRETE SCREW	1 1/4"	2"

(1) CONCRETE SCREWS SHALL BE ELCO ULTRACONS (C.S.), ELCO CRETE-FLEX (S.S.), ITW RAMSET/RED HEAD TAPCONS (C.S. OR S.S.) OR HILTI KWIK-CON II (C.S OR S.S.).

WARREN W. SCHAEFER LICENSE No. 44135 STATE OF FLORIDA PROFESSIONAL ENGINEER

THESE DRAWINGS ARE APPLICABLE ONLY TO THE PRODUCT SPECIFIED. THEY MAY NOT BE USED FOR THE ASSEMBLY AND/OR INSTALLATION OF ANY OTHER PRODUCT NOR MAY THEY BE USED FOR RATIONAL AND/OR LOCAL APPROVAL OF ANY PRODUCT NOT PRODUCED BY THE MANUFACTURER STATED ON THESE DRAWINGS.

DRAWN BY: W.W.S.	CHECKED BY: W.W.S.
PLOT: 1=16	DATE: 03/15/22

NO.	REVISION DESCRIPTION	BY	DATE
A1	UPDATE FOR NEW TESTING	WWS	07/12/22

DRAWING TITLE: OLD WORLD SUITE IMPACT OUT-SWING CASEMENT WINDOWS

MANUFACTURER: HOPE'S WINDOWS, INC. 84 HOPKINS AVENUE JAMESTOWN, NY 14702 (716) 665-5124

CONSULTANTS: W. W. SCHAEFER ENGINEERING & CONSULTING, P.A. (CA 6809) 26376 NADIR ROAD; UNIT 309 PUNTA GORDA, FL 33983 PHONE: 561-346-5638

WARREN W. SCHAEFER, P.E. P.E. NO. 44135

DRAWING NO. 2009 REV. A

SHEET NO. 1 OF 5

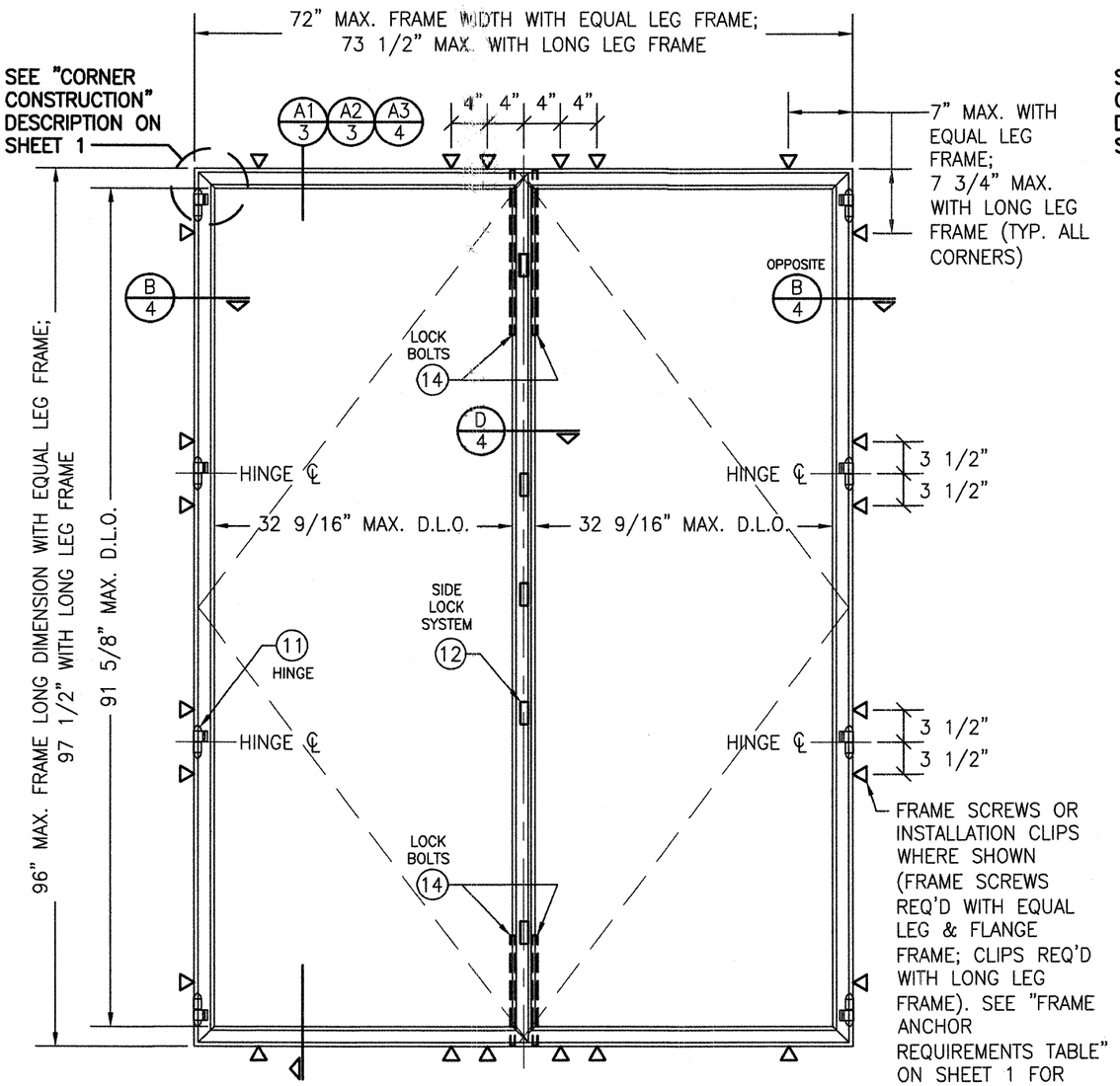

EXTERIOR ELEVATION: STANDARD DOUBLE FOLD CASEMENT WINDOW

SCALE: 3/4" = 1'-0"

ALLOWABLE DESIGN PRESSURE (DOUBLE FOLD WINDOWS)
+/-60 PSF

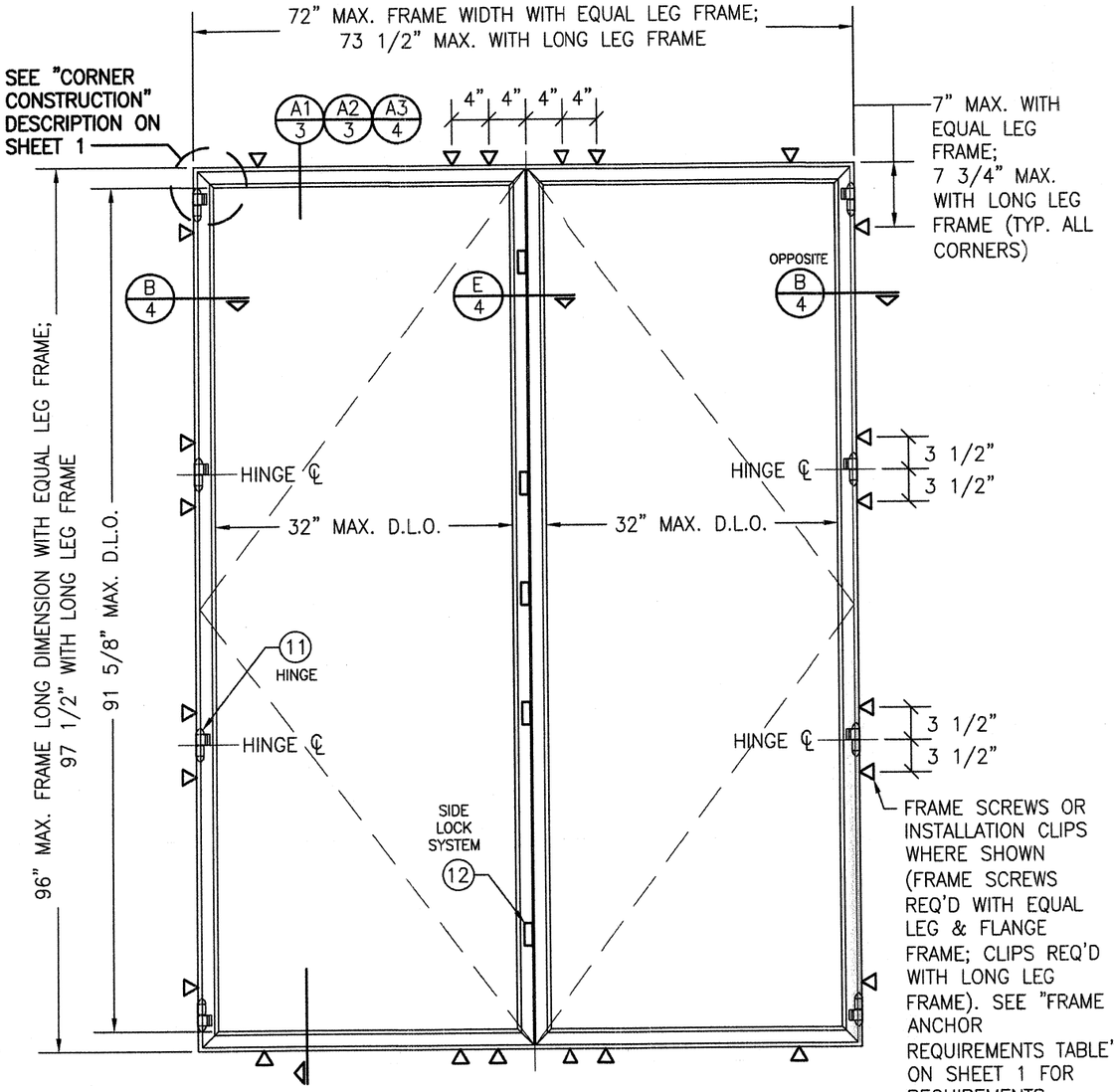

EXTERIOR ELEVATION: DOUBLE CASEMENT WINDOW WITH T-ASTRIGAL

SCALE: 3/4" = 1'-0"

ALLOWABLE DESIGN PRESSURE (DOUBLE T-ASTRIGAL WINDOWS)
+/-70 PSF

WARREN W. SCHAEFER LICENSE No. 44135 STATE OF FLORIDA PROFESSIONAL ENGINEER

JUL 12 2022

DRAWN BY: W.W.S.	CHECKED BY: W.W.S.
PLOT: 1=16	DATE: 03/15/22

NO.	REVISION DESCRIPTION	BY	DATE

DRAWING TITLE: OLD WORLD SUITE IMPACT OUT-SWING CASEMENT WINDOWS

MANUFACTURER: HOPE'S WINDOWS, INC.
84 HOPKINS AVENUE
JAMESTOWN, NY 14702
(716) 665-5124

CONSULTANTS: W. W. SCHAEFER ENGINEERING & CONSULTING, P.A. (CA 6809)
26376 NADIR ROAD; UNIT 309
PUNTA GORDA, FL 33983
PHONE: 561-346-5638

WARREN W. SCHAEFER, P.E.
P.E. NO. 44135

DRAWING NO. 2009 REV. A

SHEET NO. 2 OF 5

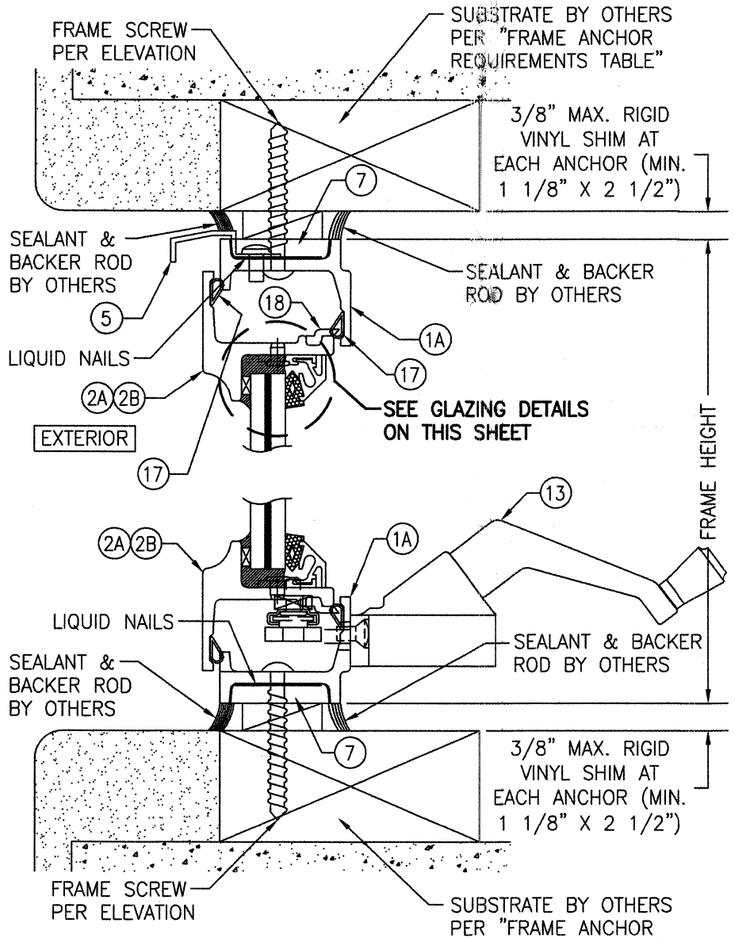

SECTION A1/3

SCALE: 1/2 FULL

(EQUAL LEG FRAME SCREW MOUNTED)

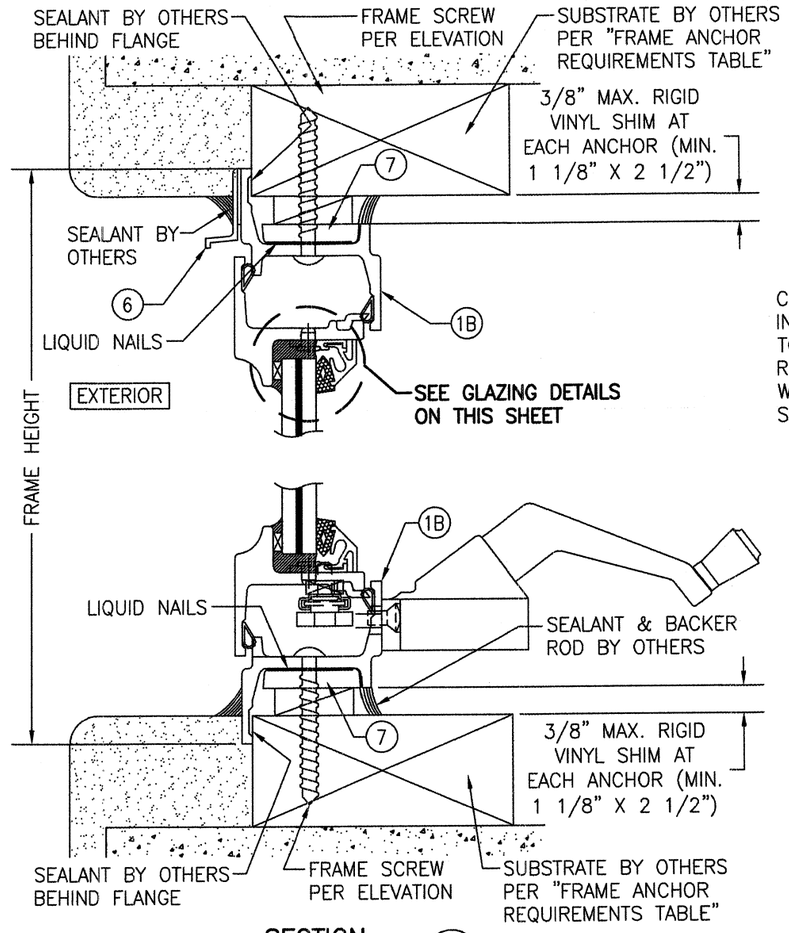

SECTION A2/3

SCALE: 1/2 FULL

(LONG LEG FRAME FLANGE MOUNTED)

(FOR DETAIL NOT SHOWN, SEE SECTION A1/3)

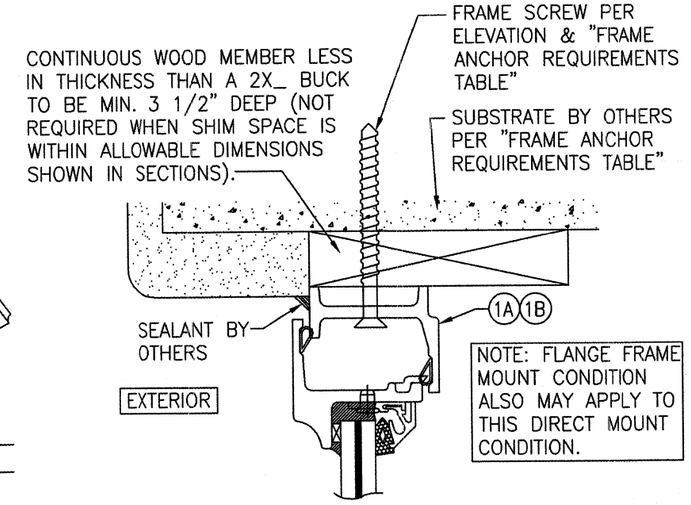

OPTIONAL DIRECT MOUNT DETAIL TO SUBSTRATE WITH SPACER

(HEAD SECTION SHOWN; SILL & SIDES ARE INSTALLED THE SAME)
(FOR DETAIL NOT SHOWN, SEE OTHER SECTIONS)

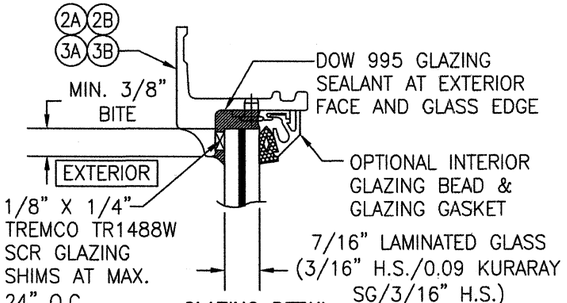

GLAZING DETAIL (MONOLITHIC GLASS)

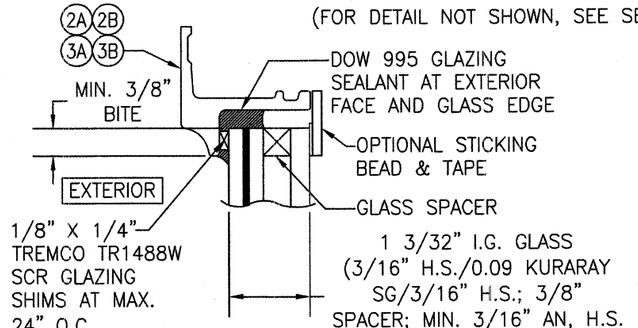

GLAZING DETAIL (I.G. GLASS)

GLAZING NOTE: AT BASE OF GLASS, TWO(2) 4" LONG SILICONE SETTING BLOCKS SHALL BE PLACED. WIDTH & THICKNESS OF BLOCKS SHALL BE AS REQUIRED TO MATCH THE GLASS SECTION THICKNESS AND DEPTH OF SPACE AT GLASS EDGE.

DRAWN BY: W.W.S.	CHECKED BY: W.W.S.
PLOT: 1=2	DATE: 03/15/22

NO.	REVISION DESCRIPTION	BY	DATE

DRAWING TITLE: OLD WORLD SUITE IMPACT OUT-SWING CASEMENT WINDOWS

MANUFACTURER: HOPE'S WINDOWS, INC. 84 HOPKINS AVENUE JAMESTOWN, NY 14702 (716) 665-5124

CONSULTANTS: W. W. SCHAEFER ENGINEERING & CONSULTING, P.A. (CA 6809) 26376 NADIR ROAD; UNIT 309 PUNTA GORDA, FL 33983 PHONE: 561-346-5638

WARREN W. SCHAEFER, P.E. LICENSE NO. 44135 STATE OF FLORIDA PROFESSIONAL ENGINEER

CERTIFICATION: JUL 11 2022

WARREN W. SCHAEFER, P.E. P.E. NO. 44135

DRAWING NO. 2009 REV. A

SHEET NO. 3 OF 5

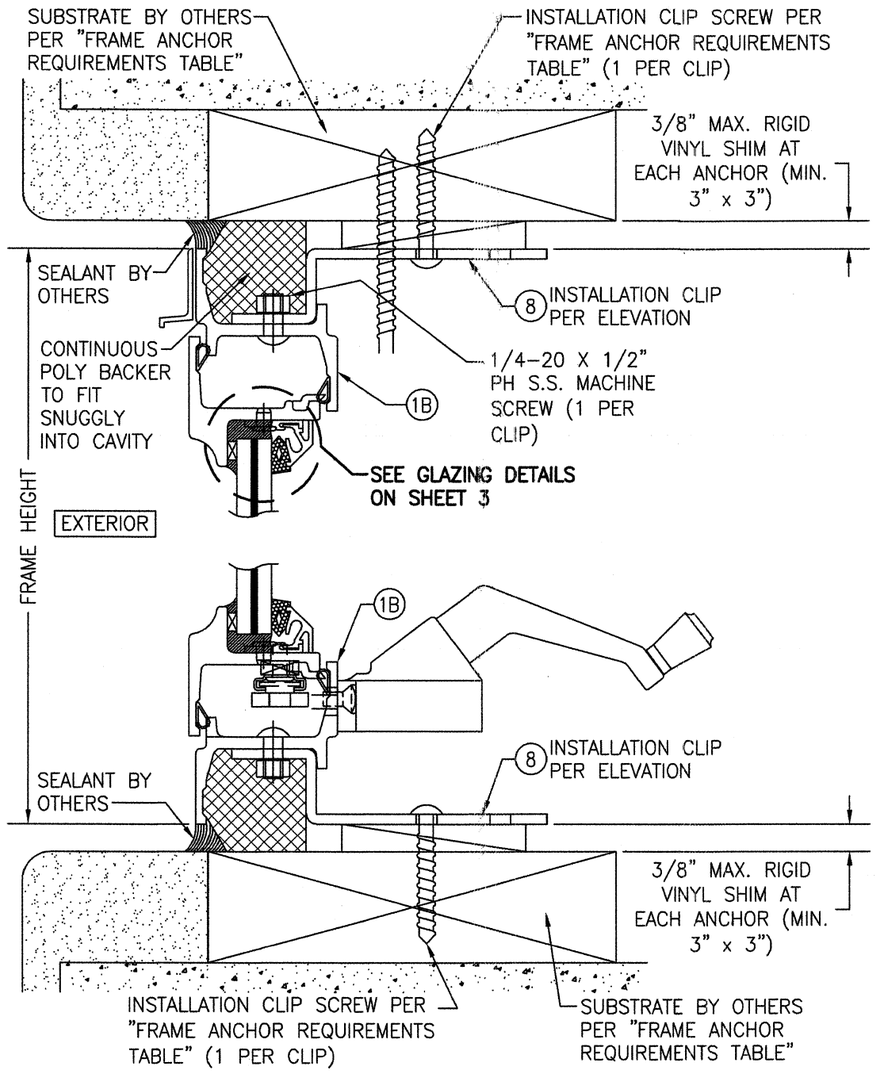

SECTION A3/4
SCALE: 1/2 FULL
(LONG LEG FRAME CLIP MOUNTED)
(FOR DETAIL NOT SHOWN, SEE SECTION A1/3)

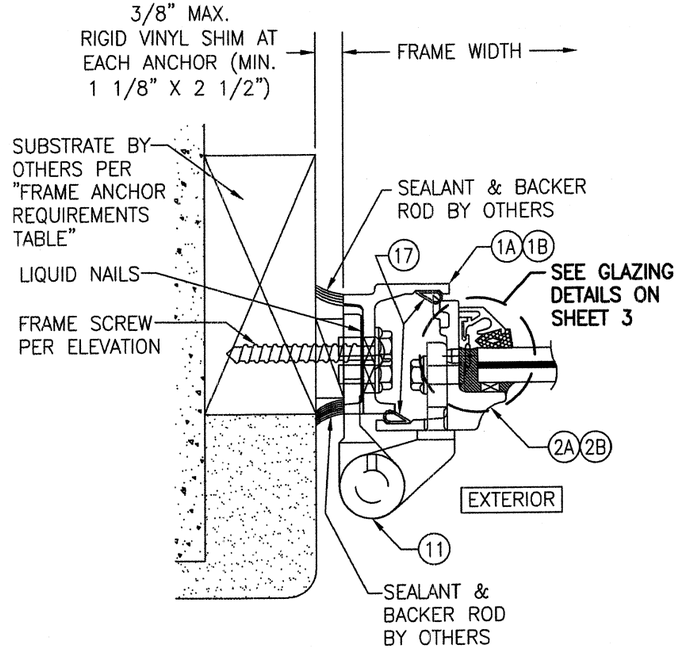

SECTION B/4
SCALE: 1/2 FULL
(EQUAL LEG FRAME SCREW MOUNTED CONDITION SHOWN. FOR LONG LEG FRAME FLANGE MOUNTED AND LONG LEG FRAME CLIP MOUNTED CONDTIONS, SEE SECTIONS A2/3 & A3/4)

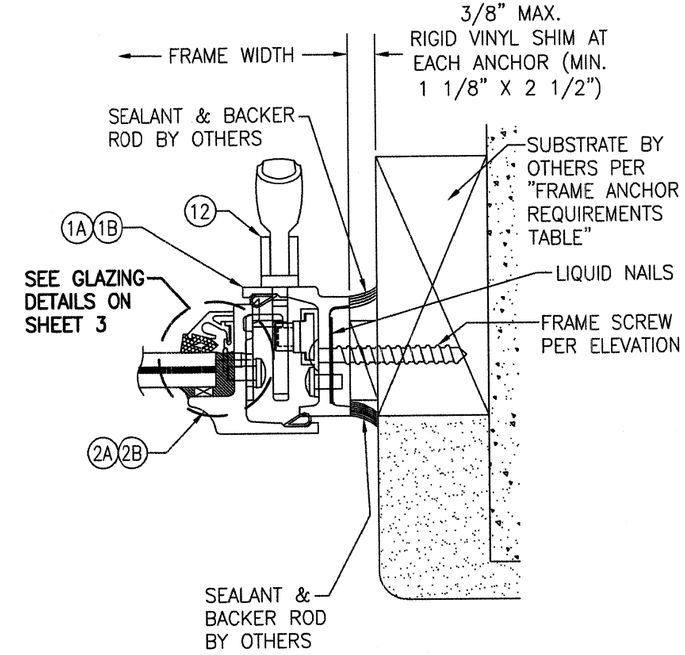

SECTION C/4
SCALE: 1/2 FULL
(EQUAL LEG FRAME SCREW MOUNTED CONDITION SHOWN. FOR LONG LEG FRAME FLANGE MOUNTED AND LONG LEG FRAME CLIP MOUNTED CONDTIONS, SEE SECTIONS A2/3 & A3/4)

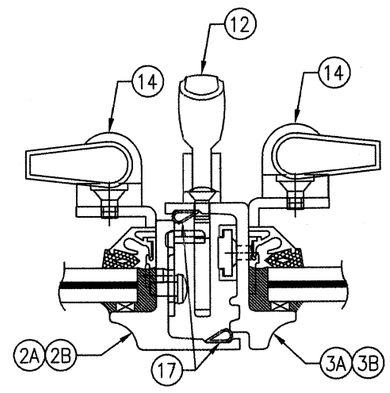

SECTION D/4
SCALE: 1/2 FULL

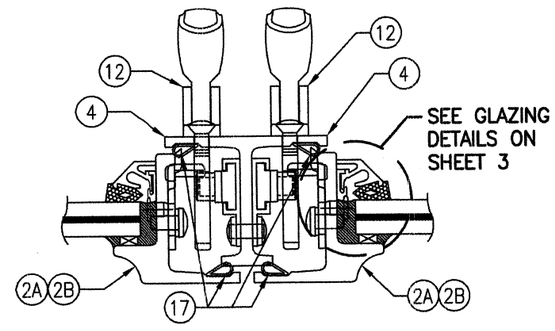

SECTION E/4
SCALE: 1/2 FULL

DRAWN BY: W.W.S.	CHECKED BY: W.W.S.
PLOT: 1=2	DATE: 03/15/22

NO.	REVISION DESCRIPTION	BY	DATE

DRAWING TITLE: OLD WORLD SUITE IMPACT OUT-SWING CASEMENT WINDOWS

MANUFACTURER: HOPE'S WINDOWS, INC.
84 HOPKINS AVENUE
JAMESTOWN, NY 14702
(716) 665-5124

CONSULTANTS: W. W. SCHAEFER ENGINEERING & CONSULTING, P.A. (CA 6809)
26376 NADIR ROAD; UNIT 309
PUNTA GORDA, FL 33983
PHONE: 561-346-5638

WARREN W. SCHAEFER, P.E.
P.E. NO. 44135

WARREN W. SCHAEFER ★ LICENSE No. 44135 ★ STATE OF FLORIDA ★ CERTIFICATE OF AUTHORIZATION ENGINEER
PROFESSIONAL ENGINEER
March 14, 2022

DRAWING NO. 2009
REV. A
SHEET NO. 4 OF 5

ITEM #	ITEM DESCRIPTION	MANUFACTURER/NOTES
	PARTS	
1A	EQUAL LEG FRAME	A36 STEEL
1B	LONG LEG FRAME	A36 STEEL
2A	STILE & RAIL	A36 STEEL
2B	ALTERNATE STILE & RAIL	A36 STEEL
3A	MEETING STILE AT INACTIVE SASH	A36 STEEL
3B	ALTERNATE MEETING STILE AT INACTIVE SASH	A36 STEEL
4	T-ASTRIGAL	A36 STEEL
5	WEATHER BAR (USED WITH EQUAL LEG FRAME)	6063-T5 ALUMINUM
6	WEATHER BAR (USED WITH LONG LEG FRAME)	6063-T5 ALUMINUM
7	FIXING HOLE FILLER SHIM	RIGID VINYL
8	INSTALLATION CLIP	10 GAGE GALVANIZED STEEL
	HARDWARE	
11	PIVOT HINGE	HOPES NO. 237S
12	MULTI-POINT LOCK CAM SYSTEM	HOPES NO. 101A
13	SINGLE ARM ROTO OPERATOR	HOPES NO. 141
14	TOP & BOTTOM LOCK BOLTS & STRIKES	HOPES NO. 20-50M3
	SEALS & SEALANTS	
17	TBP-H638 D-BULB WEATHERSTRIP	TBP SILICONE
18	CLOSED CELL FOAM EPDM WEATHERSTRIP #59150	HOPES NO. 335379

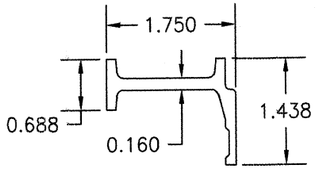

1A EQUAL LEG FRAME

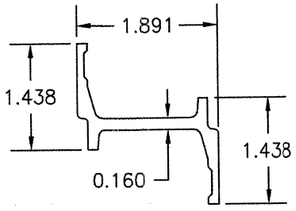

1B LONG LEG FRAME

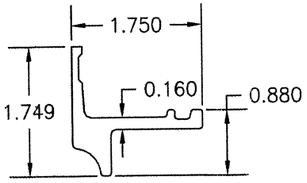

2A STILE & RAIL

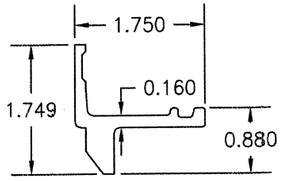

2B ALTERNATE STILE & RAIL

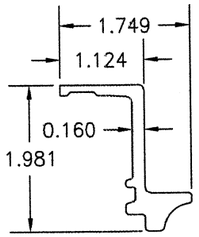

3A MEETING STILE AT INACTIVE SASH

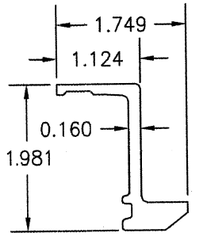

3B ALTERNATE MEETING STILE AT INACTIVE SASH

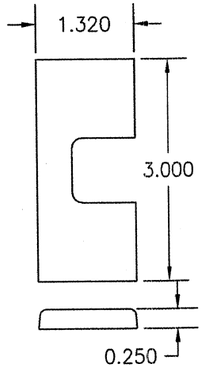

7 FIXING HOLE FILLER SHIM

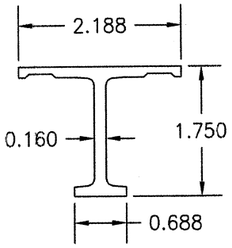

4 "T" ASTRIGAL

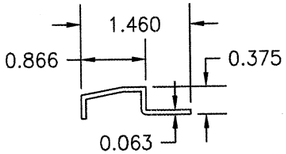

5 WEATHER BAR

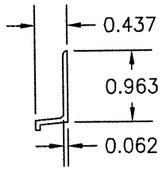

6 WEATHER BAR

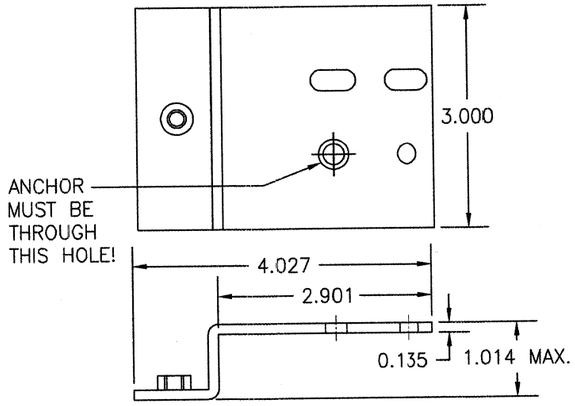

8 INSTALLATION CLIP

DRAWN BY: W.W.S.	CHECKED BY: W.W.S.
PLOT: 1=2	DATE: 03/15/22

NO.	REVISION DESCRIPTION	BY	DATE

DRAWING TITLE: OLD WORLD SUITE IMPACT OUT-SWING CASEMENT WINDOWS

MANUFACTURER: HOPE'S WINDOWS, INC.
84 HOPKINS AVENUE
JAMESTOWN, NY 14702
(716) 665-5124

CONSULTANTS: W. W. SCHAEFER ENGINEERING & CONSULTING, P.A. (CA 6809)
26376 NADIR ROAD; UNIT 309
PUNTA GORDA, FL 33983
PHONE: 561-346-5638

WARREN W. SCHAEFER, P.E.
P.E. NO. 44135

WARREN W. SCHAEFER ★ LICENSE No. 44135 ★ STATE OF FLORIDA ★ PROFESSIONAL ENGINEER

JUL 12 2022

DRAWING NO. 2009 | REV. A

SHEET NO. 5 OF 5

HOPE'S®

HOPE'S®

Congratulations on discovering Hope's – the source for the world's finest windows and doors.

Of course, that's exactly what you would expect the president of the company to say. The difference here is that I know from decades of industry experience that it's absolutely true – as do the thousands who have enjoyed the opportunity to design and specify Hope's custom windows and doors.

For design professionals yet to explore Hope's, or those who have known us for decades, we proudly provide you this detailed overview.

On behalf of all of us at Hope's, we look forward to working with you on your next project with the shared goal of creating remarkable, efficient, and enduring architecture according to your vision.

Enjoy,

Randall P. Manitta
CEO/President
Hope's Windows, Inc.

P.S. Should your travels bring you to western New York, please be sure to schedule a visit to the Hope's campus. I'd enjoy meeting you in person. Also, our plant tour qualifies for two AIA CES learning units.

Photo: IMG_INK

CONTENTS

MATERIALS

3 The Genesis

4 Material Difference

DESIGN

5 Aesthetic

6 Customized Design, Styles, and Finishes

7 Craftsmanship

PERFORMANCE

8 Proven Performance, Testing, and Code Compliance

9 Air, Water, Structural and Energy Efficiency

10 Corrosion, Hurricane, and Impact Resistance

11 Fire and Bullet Resistance

12 Blast Protection and Forced Entry Security

13 ADA and Egress, Daylighting, and Low Maintenance

14 Thermal Evolution™ Technology

DESIGN SUITES

15 Your Design Palette

16 Steel Window Series

17 Bronze Window Series

CASE STUDIES

18-23

PROFESSIONAL SERVICES

24 Services

THE GENESIS OF HOPE'S WINDOWS & DOORS

The story of Hope's custom windows and doors starts with artisans that transform solid steel billet into a variety of slim, geometrically complex, and remarkably strong profiles. This transformation is achieved through hot-rolling, a process where steel is heated to be malleable, then formed through an array of precision tooling to its final geometry.

With these precision-made profiles, Hope's crafts the world's finest windows and doors that provide unprecedented freedom of architectural expression.

Photos: Courtesy of Montanstahl

Photo: IMG_INK

THE MATERIAL DIFFERENCE

Hope's is committed to crafting windows and doors only from materials with proven ability to last for a century or longer, while providing timeless aesthetic appeal.

SOLID HOT-ROLLED STEEL

For more than 150 years, windows and doors have been crafted from solid hot-rolled steel. Many of our nation's historic buildings dating from the 1860s and earlier feature these handcrafted materials. Today, it is common for new structures to utilize wood or aluminum windows and doors, not because these materials are superior – they're simply less expensive.

What makes solid hot-rolled steel a superior material? For starters, it's three times stronger than aluminum and sixteen times stronger than wood. This strength allows Hope's to make windows and doors with the slimmest frames, the greatest amount of glass, and in virtually unlimited scale, shapes, and configurations.

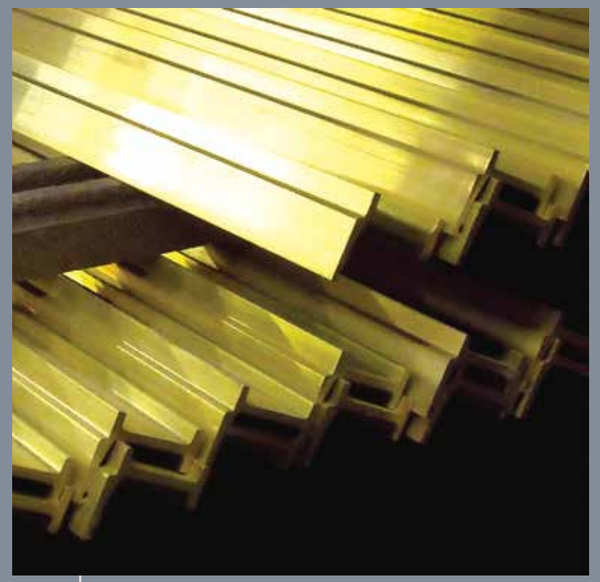

Photo: Courtesty of Montanstahl

SOLID BRONZE

For centuries, bronze has been the material of choice for the most prestigious structures. Bronze is unmatched for its ultimate durability and timeless beauty. Solid bronze offers unprecedented resistance to corrosion, even in coastal environments.

CUSTOM FORMED STEEL OR BRONZE

To achieve certain performance or aesthetic requirements, Hope's also handcrafts windows and doors by transforming heavy gauge steel, stainless steel, or bronze into custom formed profiles.

MINIMALIST, SLENDER, INVITING, REFINED

These words often describe the unique look of Hope's windows and doors. The narrow and graceful lines of Hope's windows and doors belie their formidable strength and ultimate durability. Hope's windows and doors are timeless in appearance and endure generations.

Owing to the inherent strength of solid hot-rolled steel, extremely narrow frame dimensions of Hope's windows maximize glass area.

Photo: IMG_INK

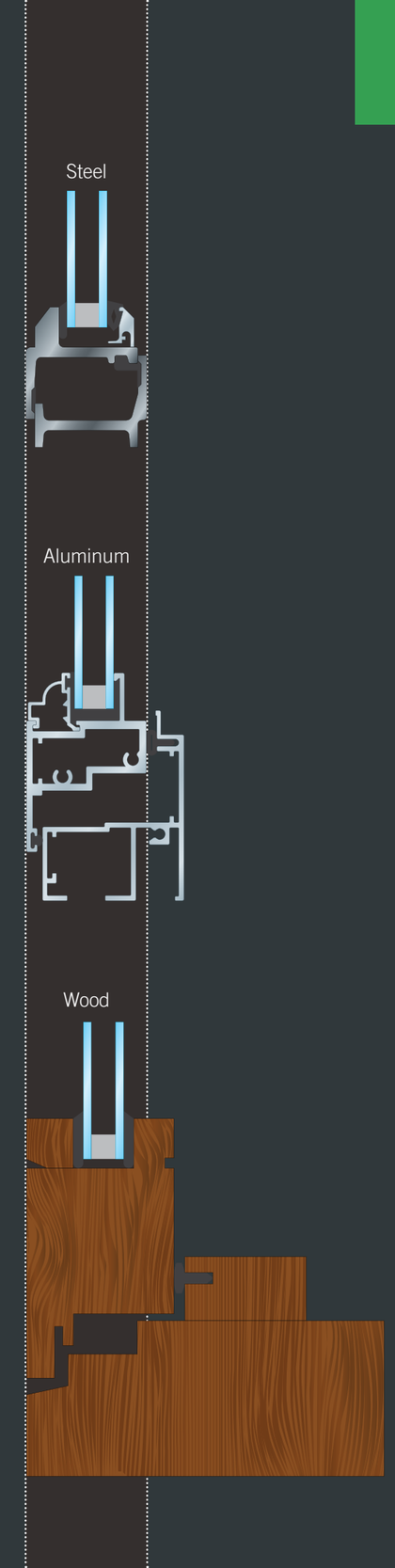

CUSTOM CHOICES AT EVERY PHASE OF DESIGN

Every Hope's window and door is custom designed by you – to achieve your specific aesthetic and performance criteria. You choose the material – steel or bronze. You choose your frame profile, shape, size, and glass. You choose true divided lites or simulated divided lites. You choose fixed or operable windows, and you decide where and how your windows open and close. You choose the functionality of your doors – swing-in, swing-out, lift-slide, or slide-fold. You choose your desired hardware – hinges, locks, handles, kick plates, and more – to ensure the longest-lasting and smoothest operation.

ANY STYLE IMAGINABLE

Whether new construction, retrofit, or historic preservation, designers incorporate Hope's windows, skylights, and doors into every variety of architectural style.

LONG-LASTING FINISHES

To achieve the longest product life cycle, Hope's employs the world's most advanced finishing system. Developed in cooperation with top U.S. metallurgists and architectural coatings suppliers, Hope's finishing system is engineered to ensure that windows and doors remain pristine and free from corrosion decade after decade, even in the harshest environments.

Hope's finishing process is the most comprehensive coating system available. For the top coat, pick from our Artistic Expression Palette and unlimited color choices to perfectly integrate your design.

Photo: IMG_INK

Photo: IMG_INK

Photo: IMG_INK

ATTENTION TO YOUR EVERY DETAIL

Hope's custom crafts each and every window and door to the absolute highest standards of quality and excellence.

Solid hot-rolled steel or solid bronze profiles are formed perfectly to specified shapes, including complex curves.

Steel profiles are joined by fusion welding, a process that fuses the steel together, forming one continuous frame.

Hope's 5-axis laser precision cuts heavy gauge steel and bronze for complete design flexibility.

Hope's continually invests in new high-tech manufacturing equipment, when and where technology can enhance quality and product performance.

The slag that forms at welded joints is ground and sanded smooth until visually imperceptible. Windows and doors appear to have been made from a single piece of solid steel or bronze.

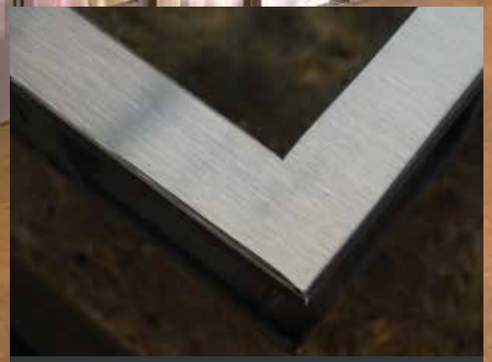

Formed steel and bronze windows undergo the same rigorous fabrication procedures to achieve structural and visual perfection.

Windows and doors equipped with Thermal Evolution™ technology feature fiber-reinforced polymer (FRP) isolators. These isolators are precision machined to nest perfectly within Hope's traditional hot-rolled solid steel frame profiles where they are permanently bonded.

Photo: IMG_INK

PROVEN PERFORMANCE YOU SHOULD EXPECT FROM CUSTOM CRAFTED WINDOWS AND DOORS

Hope's custom crafted windows and doors set the standard for performance excellence that no other steel manufacturer has ever equaled. Hope's provides peace of mind with products that are tested and proven to deliver protection solutions for inclement weather, harsh and extreme environments, and even dangerous situations caused by man or Mother Nature.

THIRD-PARTY TESTING AND CERTIFICATION

Hope's prides itself on its long-standing commitment to testing and certification, subjecting its products to more third-party testing and certifications than any other steel window and door manufacturer. The process of exceeding both rigorous, independent testing and customer expectations begins with the engineering and design of Hope's products – expertise derived from more than 100 years of experience. For detailed testing results from industry organizations such as ASTM, NFRC, The Florida Building Code, and others, contact Hope's.

CODE COMPLIANCE

Hope's provides custom solutions to satisfy local, state, and national building code requirements of any building project. Regardless of how complex or challenging a building code, there is a solution, and Hope's can provide it.

Photo: IMG_INK

AIR, WATER, AND STRUCTURAL PERFORMANCE

Air infiltration and water penetration are two of the biggest issues that can affect performance. That's why Hope's windows and doors are rigorously tested for structural performance against exterior wind load, air leakage, and water penetration.

- TESTING: ASTM E283 – Air Infiltration
  ASTM E331 – Water Penetration
  ASTM E330 – Structural Loading

THERMAL PERFORMANCE AND ENERGY EFFICIENCY

Hope's is committed to crafting energy-efficient windows and doors. The intrinsic properties of Hope's solid bronze and solid hot-rolled steel windows and doors provide optimal thermal performance as substantiated by third-party testing and NFRC certifications. With pioneering innovation, Hope's has developed Thermal Evolution™ technology. This advanced thermal-break technology provides exceptional thermal performance and condensation resistance. The patented Thermal Evolution technology is third-party tested and NFRC certified.

- TESTING: NFRC 100 – Thermal U-Value
  NFRC 200 – Solar Heat Gain
  NFRC 400 – Air Infiltration
  NFRC 500 – Condensation Resistance

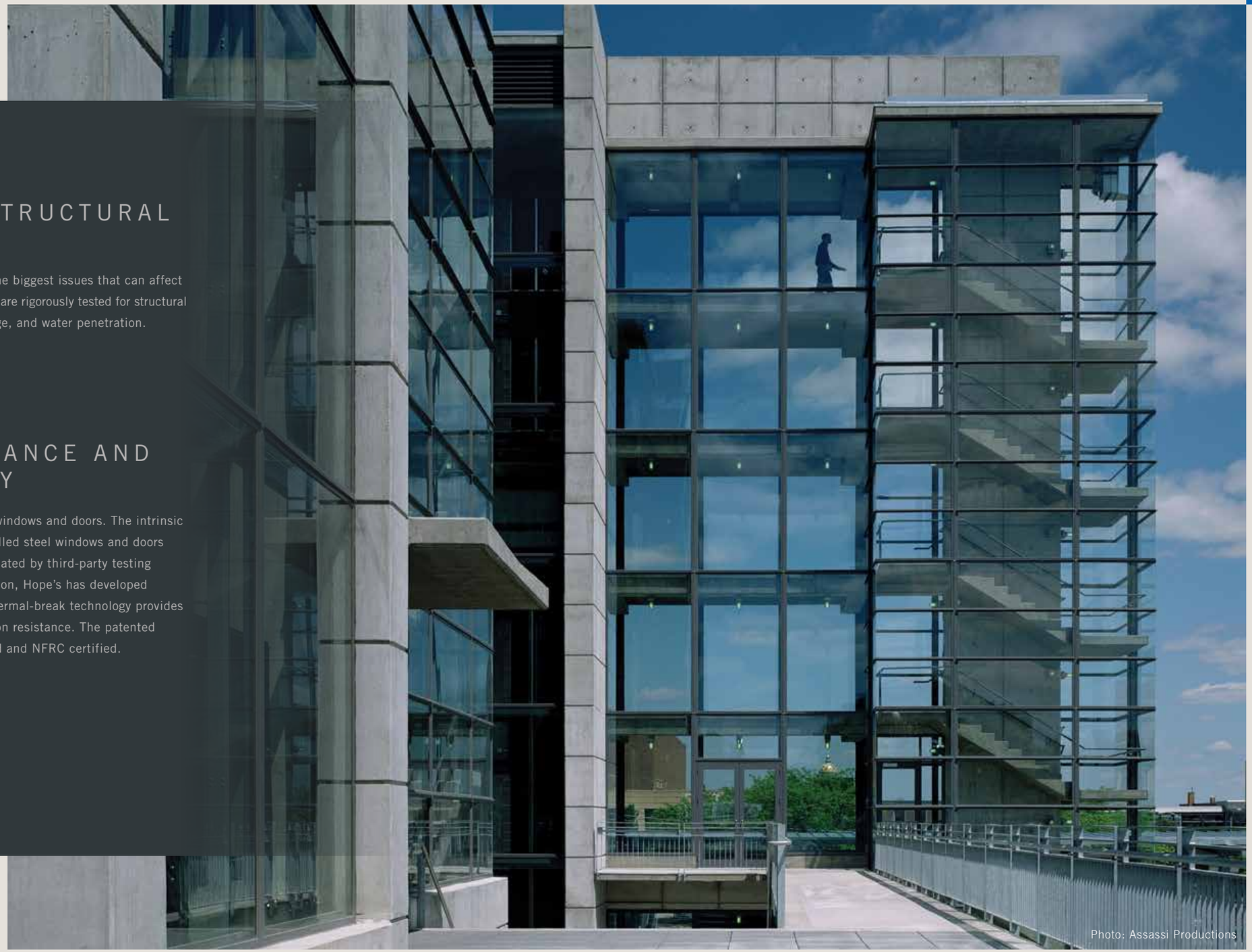

Photo: Assassi Productions

PROTECTION FROM CORROSIVE ENVIRONMENTS

Hope's low-maintenance protective coating and finishing system provides incomparable long-term protection against corrosion and abrasion whether your building is inland or oceanfront. Hope's coating and finishing processes exceed the most rigorous testing standards and are carefully scrutinized to ensure products will perform, both aesthetically and functionally, for decades to come.

- TESTING: ASTM D174 – Paint Blistering

  ASTM D4585 – Humidity

  ASTM B117 – Salt Spray and Fog

  ASTM D1654 – Painted Products in Corrosive Environments

  ASTM G85 – Cyclic Fog and Dry (Prohesion)

  ASTM D5894 – Salt Fog/UV Painted Metal

  ASTM D4541 – Pull Off Strength of Coating

HURRICANE AND IMPACT RESISTANT

Designed and tested to protect against the most brutal storms and flying debris, Hope's impact-rated hurricane windows and doors eliminate the maintenance and added cost of hurricane shutters. Hope's offers the industry's largest selection of fully tested and certified windows and doors for use within hurricane and impact zones – including lift-slide and slide-fold door systems. Available in solid hot-rolled steel or bronze, Hope's custom crafted windows and doors provide timeless aesthetics, enhanced views, and passive storm protection.

- TESTING: ASTM E1996 – Impact (Hurricane)

  ASTM E1886 – Cyclic Pressure

  TAS 201, TAS 202, and TAS 203 – Florida Building Code testing protocol for hurricane resistant product approvals, including High Velocity Hurricane Zone (HVHZ) areas

Photo: IMG_INK

FIRE RESISTANCE

Hope's windows and doors are subjected to fire resistance testing, certification, and labeling. Fire resistance is just one more way Hope's demonstrates commitment to the safety and welfare of people and property.

- TESTING: ASTM E119 – Standard Test Methods for Fire Tests of Building Construction and Materials

  NFPA 251 – Standard Methods of Tests of Fire Resistance of Building Construction and Materials

  NFPA 252 – Standard Methods of Fire Tests of Door Assemblies

  UBC Standard 7-1-97 – Fire Tests of Building Construction and Materials

  UBC Standard 7-2-97 – Fire Tests of Door Assemblies

  UL 10c – Standard for Positive Pressure Fire Tests of Door Assemblies

  UBC 7-4 – Fire Tests of Window Assemblies

BULLET RESISTANCE

For the highest security needs, Hope's offers life-saving protection against bullets in gunfire situations. From government buildings and safe rooms to storefronts and banks, these windows provide the best protection available today with the superior aesthetic that is standard with Hope's.

- TESTING: UL752 – Bullet Resistance

Photo: LS3P Photography
Interior designed by LS3P Associates Ltd. Image Studio

BLAST PROTECTION

High-risk buildings, such as government facilities and airports, must be designed with windows and doors that complement their structural integrity and mitigate the hazardous effects of flying glass and other debris following an explosion. Hope's blast protection can be integrated into any existing Hope's design suite, providing life-saving protection with the same narrow profiles and elegant sightlines.

- TESTING: ASTM F1642 – Glazing and Glazing Systems Subject to Airblast Loading

  GSA TSO1 Level C and Level D. Exceeds the Department of Defense Anti-terrorism Standard #UFC 4-010-01

FORCED ENTRY SECURITY

Safety and security are of utmost concern to building owners and to Hope's. These concerns are taken into consideration with every window and door. Rest assured that Hope's offers window and door solutions that are designed, tested, and manufactured to stand up to forced entry, ensuring life safety and protection of property.

- TESTING: ASTM 588 – Forced Entry

Photo: Lara Swimmer

ADA AND EGRESS COMPLIANCE

All Hope's windows and doors can meet ADA and egress requirements. Because these codes vary by location, Hope's depends on its years of industry experience to work with design professionals to ensure all requirements are met.

NATURAL DAYLIGHTING

Hope's windows allow for narrower frames which, in turn, allow more natural daylight to fill a room. Studies prove that natural daylight promotes the feeling of well-being, helps the healing process in medical facilities, and positively affects the mood and productivity of building occupants. Additionally, improved daylighting can significantly reduce the energy consumption for electric lighting.

LOW-MAINTENANCE AND SUSTAINABILITY

Every Hope's custom crafted window and door is built to last a century or longer with minimal maintenance requirements. Hope's is committed to crafting energy-efficient windows and doors from sustainable materials. And Hope's superior coating and finishing system requires less maintenance than other window and door materials. Compare this long life cycle to alternatives, and it's clear that Hope's is the best long-term investment, both environmentally and financially. Contact Hope's for additional sustainability and LEED® information.

Photo: IMG_INK

Solid steel fixed window with
Thermal Evolution technology

THERMAL EVOLUTION™ TECHNOLOGY

Hope's revolutionizes windows and doors again by innovating the world's first and only thermally-broken solid hot-rolled steel window and door system. Hope's technology features a fiber-reinforced polymer (FRP) isolator that is precision-machined to nest perfectly within Hope's traditional hot-rolled solid steel frame profiles. This FRP isolator provides high thermal resistance and is structurally bonded to Hope's steel window and door frames. This strong and enduring composite construction delivers impressive thermal efficiency and enhanced resistance to condensation. With Thermal Evolution technology, all the intrinsic strengths of solid hot-rolled steel are maintained along with enhanced thermal efficiency, exceeding today's most stringent thermal codes. Thermal Evolution technology can also be incorporated into bronze or custom-formed systems for increased energy performance.

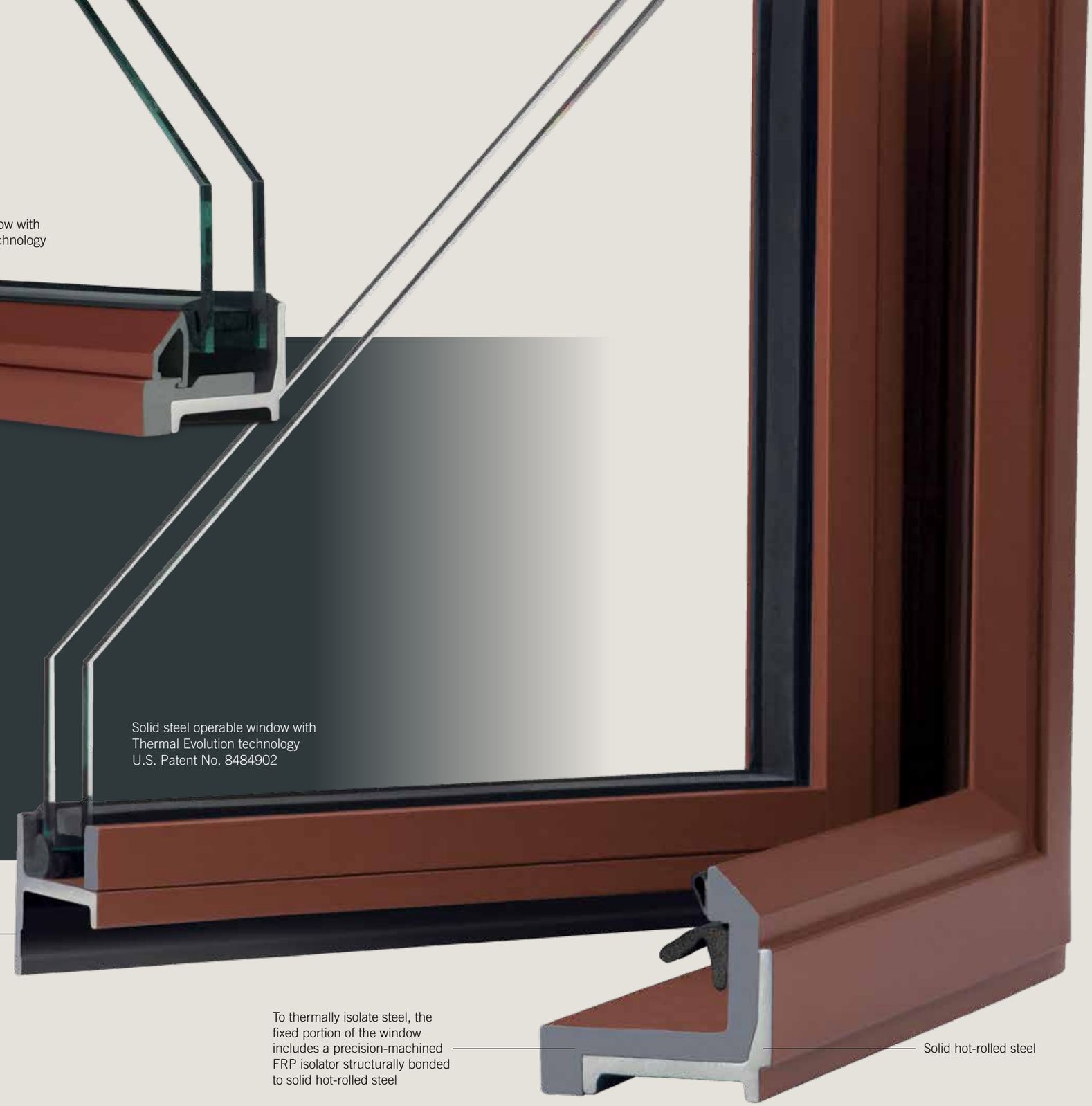

Photo: IMG_INK

YOUR DESIGN PALETTE

Designing a Hope's window or door begins with the selection of one of Hope's exclusive design suites – Jamestown175™ Series, Landmark175™ Series, University Series™, One55™ Series, 5000 Series™, or Empire Bronze™. Each design suite consists of complementary framing and muntin profiles. A window or door may also be designed with a framing profile from one suite and a muntin profile from another. Again, the design is entirely yours.

JAMESTOWN175™ SERIES

Ideal for projects requiring oversize windows and doors, while providing a narrow 1-7/16" sightline for fixed windows and a narrow 2-5/8" sightline for operable windows and doors.

LANDMARK175™ SERIES

Ideal for projects requiring large windows and doors, while providing a narrow 1-7/16" sightline for fixed windows and a slim 2-3/16" sightline for operable windows and doors.

UNIVERSITY SERIES™

Designed for projects requiring historic replication of exterior putty-glazed steel windows and doors. The unique profile and narrow sightlines are ideal for new construction as well as replacement projects.

ONE55™ SERIES

Designed for projects requiring replication of historic steel windows with arrow-shaped profiles.

5000 SERIES™

Custom formed from heavy gauge steel and provides the greatest latitude for design flexibility and hardware options for high-traffic areas.

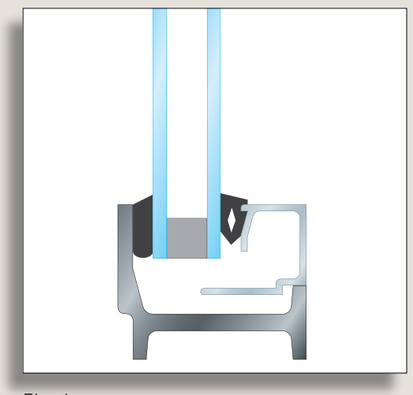

Fixed

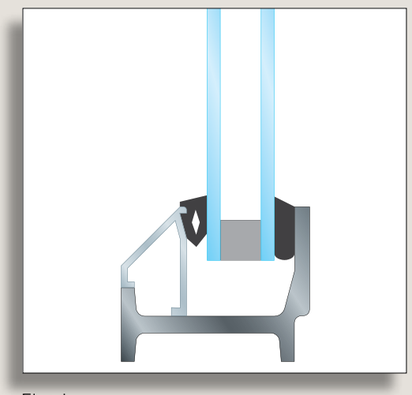

Fixed

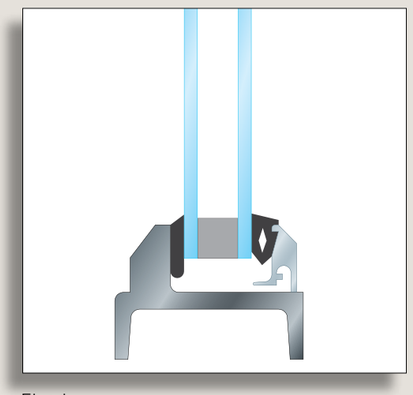

Fixed

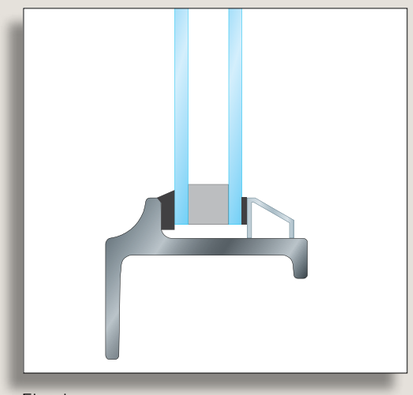

Fixed

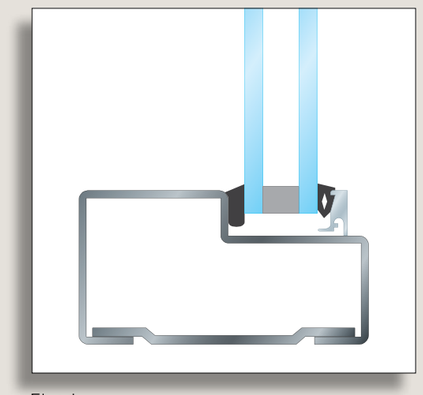

Fixed

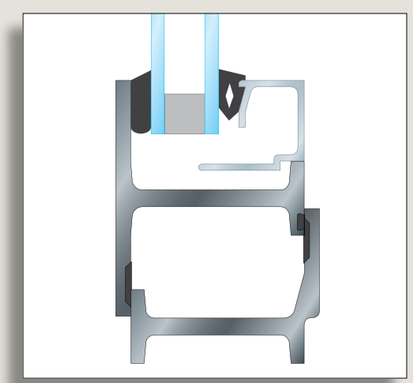

Operable

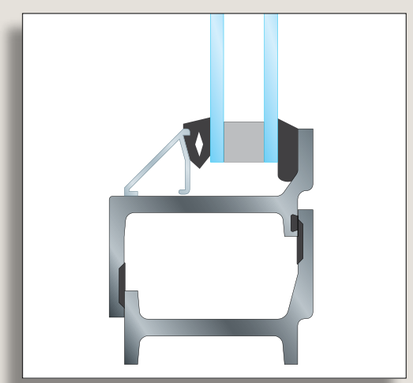

Operable

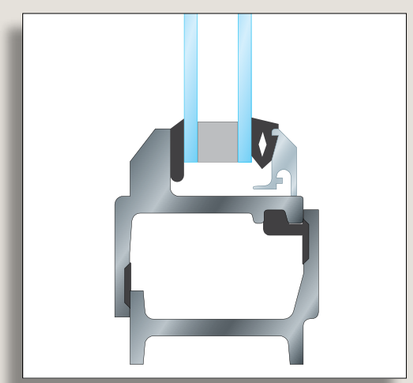

Operable

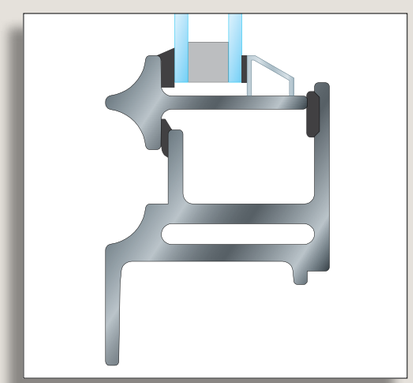

Operable

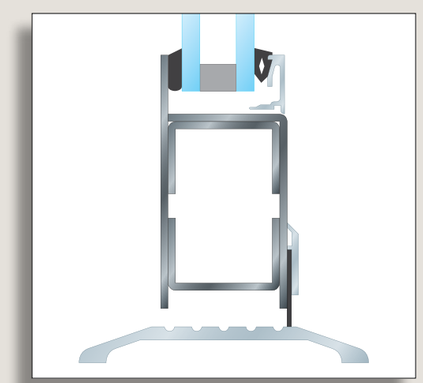

Door

Details not actual size

BRONZE

EMPIRE BRONZE™ JAMESTOWN175™ SERIES

Offers the ageless beauty of solid bronze with the elegant sightlines, durability, and meticulous manufacturing techniques synonymous with all Hope's products.

EMPIRE BRONZE™ 5000 SERIES™

Custom formed from heavy gauge bronze and provides the greatest latitude for design flexibility and hardware options for high-traffic areas.

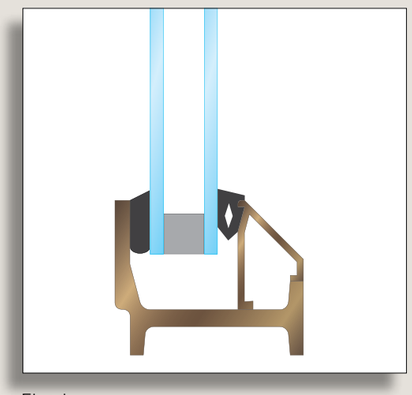

Fixed

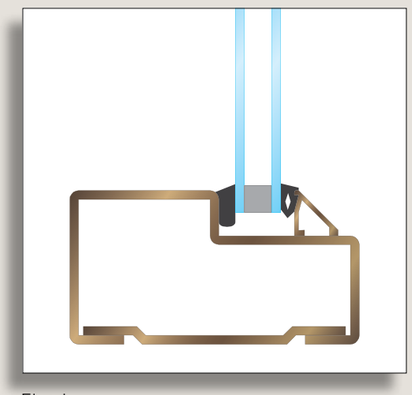

Fixed

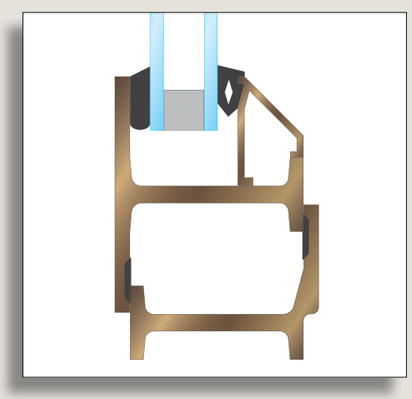

Operable

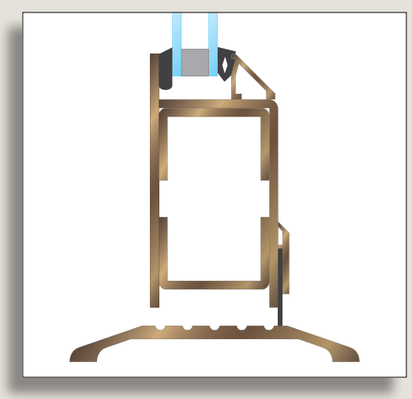

Door

Photo: IMG_INK

Details not actual size

MUSIC BOX FILMS

PROJECT

When film distributor Music Box Films decided to convert a 7,000-square foot, two-story space into a single-story building with a mezzanine for its new offices, Hope's was selected to provide custom, handcrafted steel windows and doors. Located in Chicago's West Loop enterprise zone, the project was awarded a prestigious Small Project Award from the Chicago Chapter of the American Institute of Architects (AIA).

RETROFIT ARTFULLY HARMONIZING OLD WITH NEW

APPLICATION & BENEFITS

Hope's provided Jamestown175™ Series solid hot-rolled steel windows and 5000 Series™ steel doors – along with custom mullion, muntin, and glazing solutions – to meet the design requirements for the exterior façade and vestibule. *Chicago Architect* magazine quoted an AIA award juror who referred to the "juxtaposition between modern and old," a common design objective Hope's windows and doors have fulfilled for more than a century.

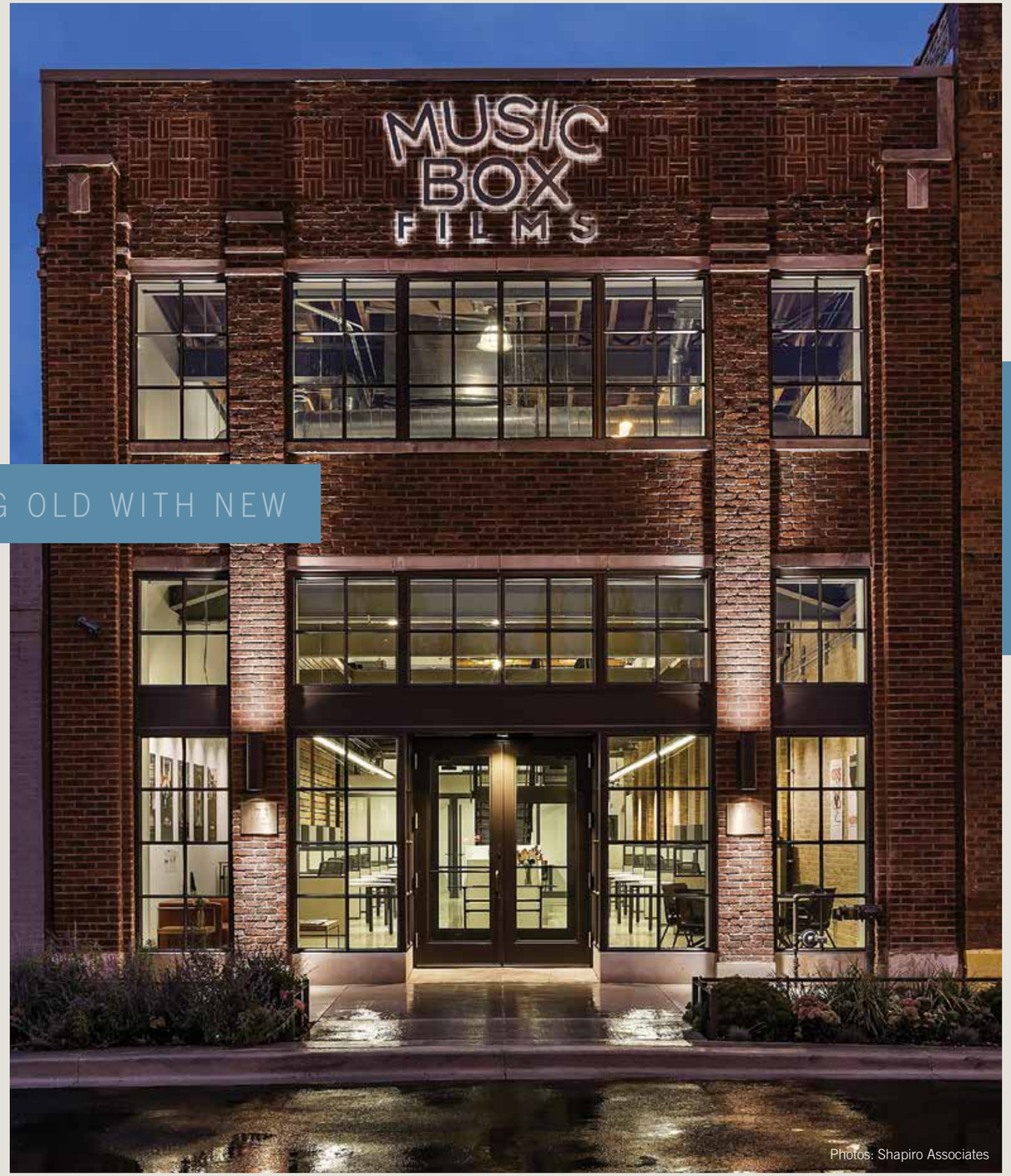

Photos: Shapiro Associates

"Our space was renovated with the aesthetic of the sci-fi classic 'Blade Runner' in mind. The building speaks to our vision and commitment to artistry."

Music Box Films

Architect: Shapiro Associates, Chicago, IL

Contractor: Knudsen Construction, Inc., Calumet City, IL

Engineering Consultants: McGuire Engineers, Inc, Chicago, IL, and Samartano & Co., Chicago, IL

Owner: Music Box Films

Windows: Jamestown175 Series steel windows

Doors: 5000 Series steel doors

MARY E. SWITZER BUILDING

PROJECT

Built in the 1930s and listed on the National Register of Historic Places, the 592,000-square foot Mary E. Switzer Building in Washington, D.C. required a complex, two-phase modernization inside and out. Hope's was recruited to design and fabricate historically compliant blast protection windows with updated thermal qualities, conforming to the existing Egyptian Revival architectural details.

GOVERNMENT

BLAST PROTECTION, HISTORICALLY CONSISTENT

APPLICATION & BENEFITS

To meet governmental standards for anti-terrorism and historical compliance, Hope's steel windows with blast protection were custom designed to complement the integrity of this important period building. Hope's successfully open-air tested its blast resistant windows and met the General Services Administration (GSA) security criteria for Level C and the Department of Defense (DoD) Anti-terrorism Standards.

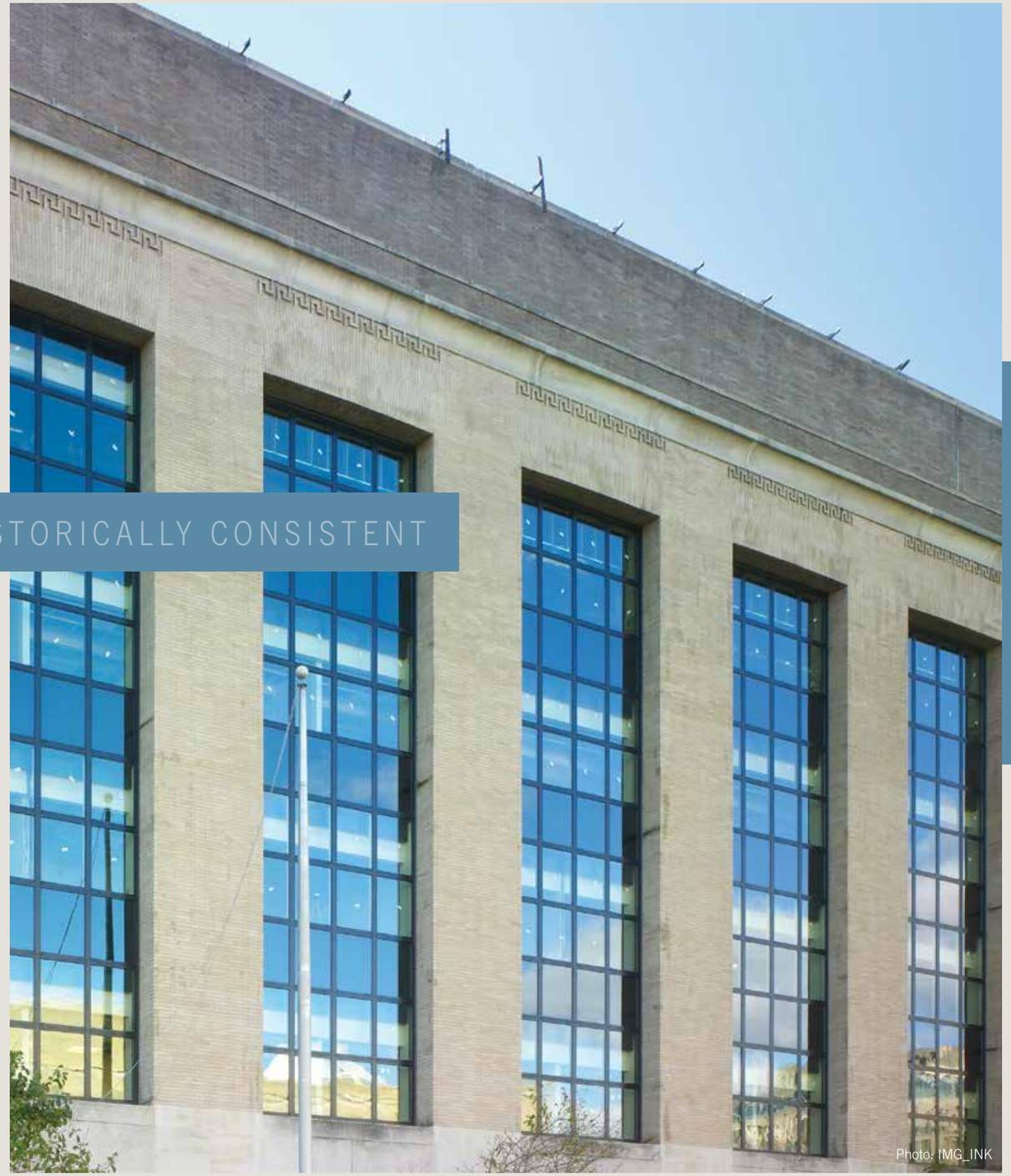

Photo: IMG_INK

"Hope's has earned a heartfelt 'thank you' for everything they have done to make the windows on our project a resounding success. The project could not have come to fruition so seamlessly or expeditiously without the dedication and attention to detail by the whole organization."

Jonathan Mitz
Senior Project Manager
Grunley Construction Co., Inc.

Architect: HNTB, Arlington, VA

Contractor: Grunley Construction Co., Inc., Rockville, MD

Engineering/Construction: Amco Metal Products, Inc., Gaithersburg, MD

Owner: U.S. General Services Administration

Windows: Liberty Series™ steel blast resistant windows

UNIVERSITY OF CALIFORNIA SCHOOL OF CINEMATIC ARTS

PROJECT

Hope's steel windows and doors were installed in the new home of the University of Southern California's School of Cinematic Arts – a four-acre complex of six buildings, including two named after George Lucas and Steven Spielberg. The project was sparked by a $175 million donation from Lucas, who specifically requested the new campus reflect the historic Mediterranean (or Southern California Mission) style prevalent in 1929, the year USC adopted film studies as part of its curriculum.

EDUCATION

CINEMA SCHOOL PROJECT, A BLOCKBUSTER SUCCESS

APPLICATION & BENEFITS

Hope's Jamestown175™ Series solid hot-rolled steel windows and doors were installed in all three phases of the project. The design elements included 200 custom crafted arched and rectangular windows. In addition to providing an elegant aesthetic, the durability and structural strength of Hope's products enabled the project team to achieve another design objective: create buildings that would last for generations. Even before the final phase began, the project received the prestigious Grand Prize at the 41st annual Los Angeles Architectural Awards.

Photos: John Linden

> "A high-profile project like this must satisfy some of the most creative minds in the world. The university is very pleased by the elegant look realized by the quality of Hope's steel windows and doors."
>
> Carter Moore, Architect
> Urban Design Group

Architect: Urban Design Group, Dallas, TX

Contractor (Phases 1 and 2): Hathaway Dinwiddie, Los Angeles, CA

Contractor (Phase 3): MATT Construction, Santa Fe Springs, CA

Glazier (Phases 1 and 2): Vision Systems, El Cajon, CA

Glazier (Phase 3): Giroux Glass Inc., Los Angeles, CA

Owner: University of Southern California

Windows: Jamestown175 Series steel windows

Doors: Jamestown175 Series steel doors

BIRTHPLACE OF COUNTRY MUSIC MUSEUM

PROJECT

After more than a decade of planning and fundraising, the restoration of an historic 1920s-era, 24,000-square foot building quickly became the home of the newly created, state-of-the-art Birthplace of Country Music Museum. An affiliate of the Smithsonian Institution, the museum celebrates the 1927 Bristol Sessions, the first commercially successful recordings of country music, a milestone recognized by the Library of Congress. Johnny Cash declared it to be "the single most important event in the history of country music."

PRESERVATION AUTHENTIC COUNTRY

APPLICATION & BENEFITS

Architects Peyton Boyd and Michael Haslam worked with Hope's to specify University Series™ windows – solid hot-rolled steel window profiles designed for projects requiring historic replication of exterior putty glazed steel windows. Hope's 5000 Series™ steel doors are formed from heavy-gauge steel and offer the greatest latitude for customization.

"Because everyone wanted to see the exterior of this building restored to its former self, it was essential to select a window product with historically appropriate frame profiles," says Boyd. "We always design with energy efficiency in mind and love that Hope's products feature frames, mullions, and applied muntins that are handled in a way that delivers the performance we expect of our windows and doors."

Photos: Fresh Air Photo

> "The Hope's windows were one of the first components to go in. At that point, we instantly knew this project was destined to succeed. The windows give the building a specific character that would have been missing if windows of a lesser quality had been chosen."
>
> Jessica Turner
> Director and Head Curator
> Birthplace of Country Music Museum

Architect: Peyton Boyd Architect PC, Abingdon, VA

Owner: Birthplace of Country Music, Bristol, TN

Windows: University Series steel windows

Doors: 5000 Series steel doors

CHAPEL OF THE RESURRECTION, VALPARAISO UNIVERSITY

PROJECT

Rising over the highest point on the campus of Valparaiso University is the Chapel of the Resurrection. After celebrating its 50th anniversary in 2009, the beloved chapel, used for both religious services and secular events, underwent an extensive preservation project that included the replacement of its 24 soaring windows that surround the chapel's nave. The original 58-foot tall windows covering 16,700 square feet were removed and replaced with a combination of both fixed and operable Hope's solid hot-rolled steel windows. Hope's Jamestown175™ Series design suite was selected to precisely match the sightlines of the original windows, which were also precisely color-matched to the originals.

RELIGIOUS WINDOWS FOR WORSHIP

APPLICATION & BENEFITS

Hope's Jamestown175 Series windows feature solid hot-rolled steel – strong enough to allow for the narrowest frame dimensions and maximum glass area producing the best views possible. The 1-3/4" deep Jamestown175 Series windows are handcrafted, feature fully-welded construction, and are energy efficient. Hope's custom crafts every window for each project's design vision.

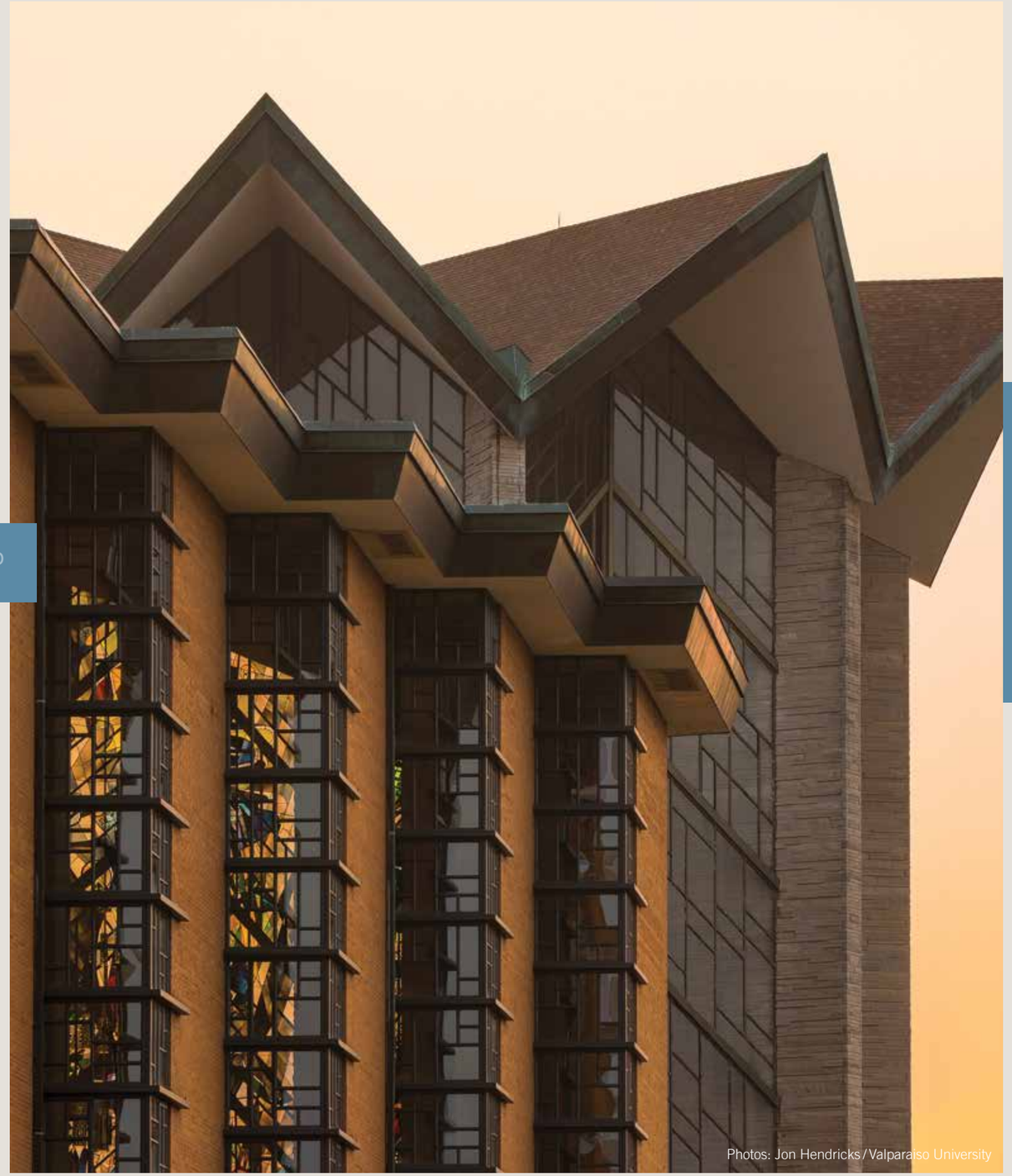

Photos: Jon Hendricks/Valparaiso University

"The Chapel of the Resurrection is grand and peaceful, beckoning students and campus visitors to come within, take a seat, and spend a little quiet time in meditation and prayer."

The Times of Northwest Indiana

Preservation Consultant: Architexas, Dallas, TX

General Contractor: The Hagerman Group, Fort Wayne, IN

Original Architect: Charles Stade and Associates, Park Ridge, IL

Owner: Valparaiso University, Valparaiso, IN

Windows: Jamestown175 Series steel windows

THE GRILL AT BAL HARBOUR

PROJECT

When the architect of Hillstone Restaurant Group was given the green light to design a new restaurant in Bal Harbour, Florida, he knew that only one manufacturer of steel windows and doors could help him achieve his unique vision and, at the same time, meet the stringent Miami-Dade impact and wind loading hurricane standards.

RETAIL

FORM OF ART, HURRICANE SAFE

APPLICATION & BENEFITS

The Grill at Bal Harbour features Hope's Jamestown175™ Series steel windows and doors and a 5000 Series™ pocket door. Transparency abounds thanks to narrow sightlines, maximum glass area, and custom engineered vertical sliding windows able to create an outdoor dining experience. Most importantly, the windows and doors are poised to help protect people and property in the event of a hurricane.

Photo: Dencon Architectural, Inc.

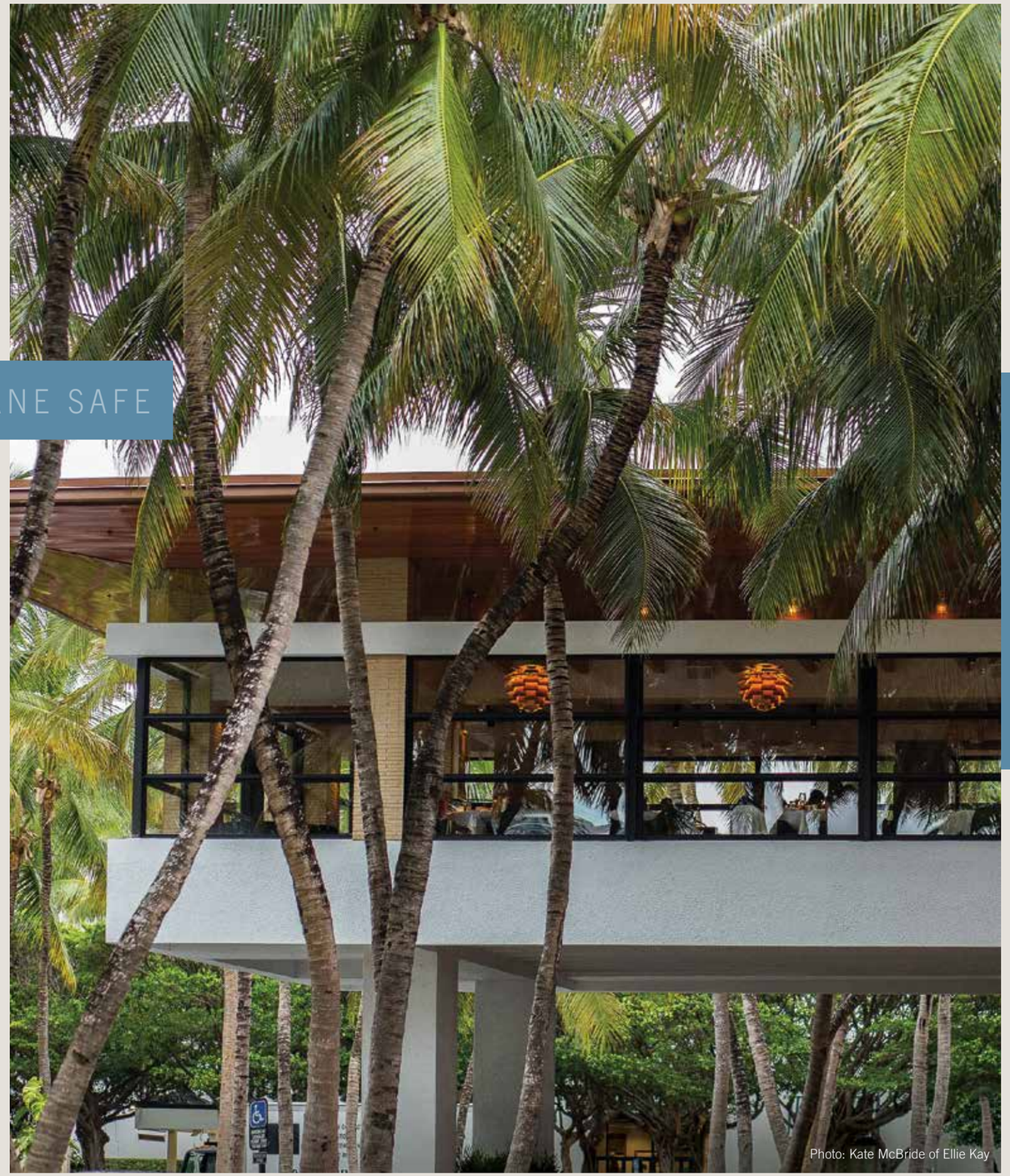

Photo: Kate McBride of Ellie Kay

"To us, Hope's windows are a form of art, elegantly working with the architecture…greatly contributing to the uninterrupted safety and comfort of our customers in the event of a hurricane."

Rakesh Patel
Senior Project Architect
Hillstone Restaurant Group

Architect: Hillstone Restaurant Group

Owner: Hillstone Restaurant Group

Windows: Jamestown175 Series steel windows

Doors: Jamestown175 Series steel doors
5000 Series pocket door

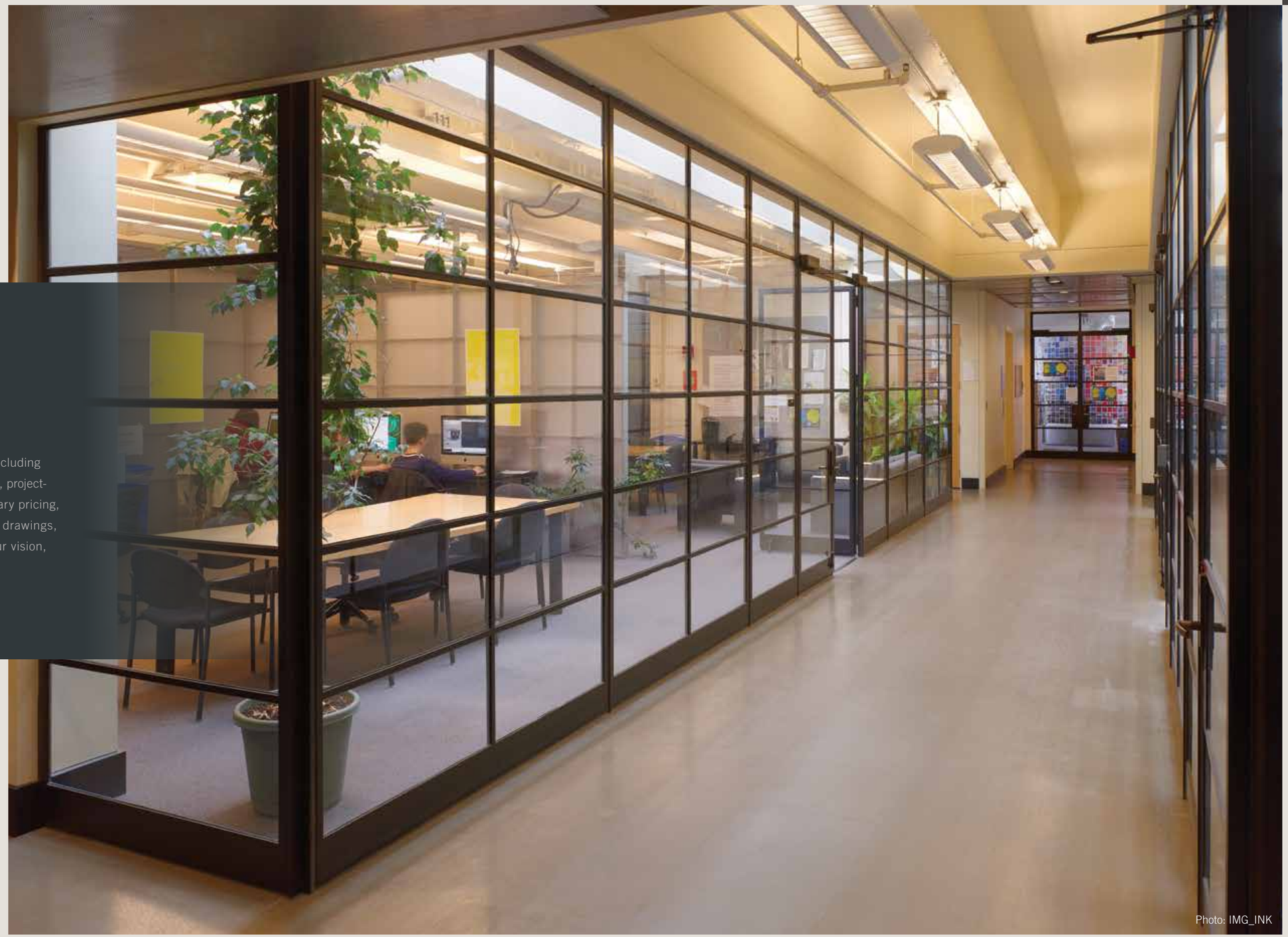

Photo: IMG_INK

PROFESSIONAL SERVICES

Hope's provides professional services including design consultation, technical assistance, project-specific details and specifications, budgetary pricing, project management, custom submittal drawings, and engineering. To begin achieving your vision, contact Hope's today.

HOPE'S®

Hope's Windows, Inc.
84 Hopkins Avenue
P.O. Box 580
Jamestown, NY 14702-0580
(716) 665-5124
(716) 665-3365 fax
HopesWindows.com

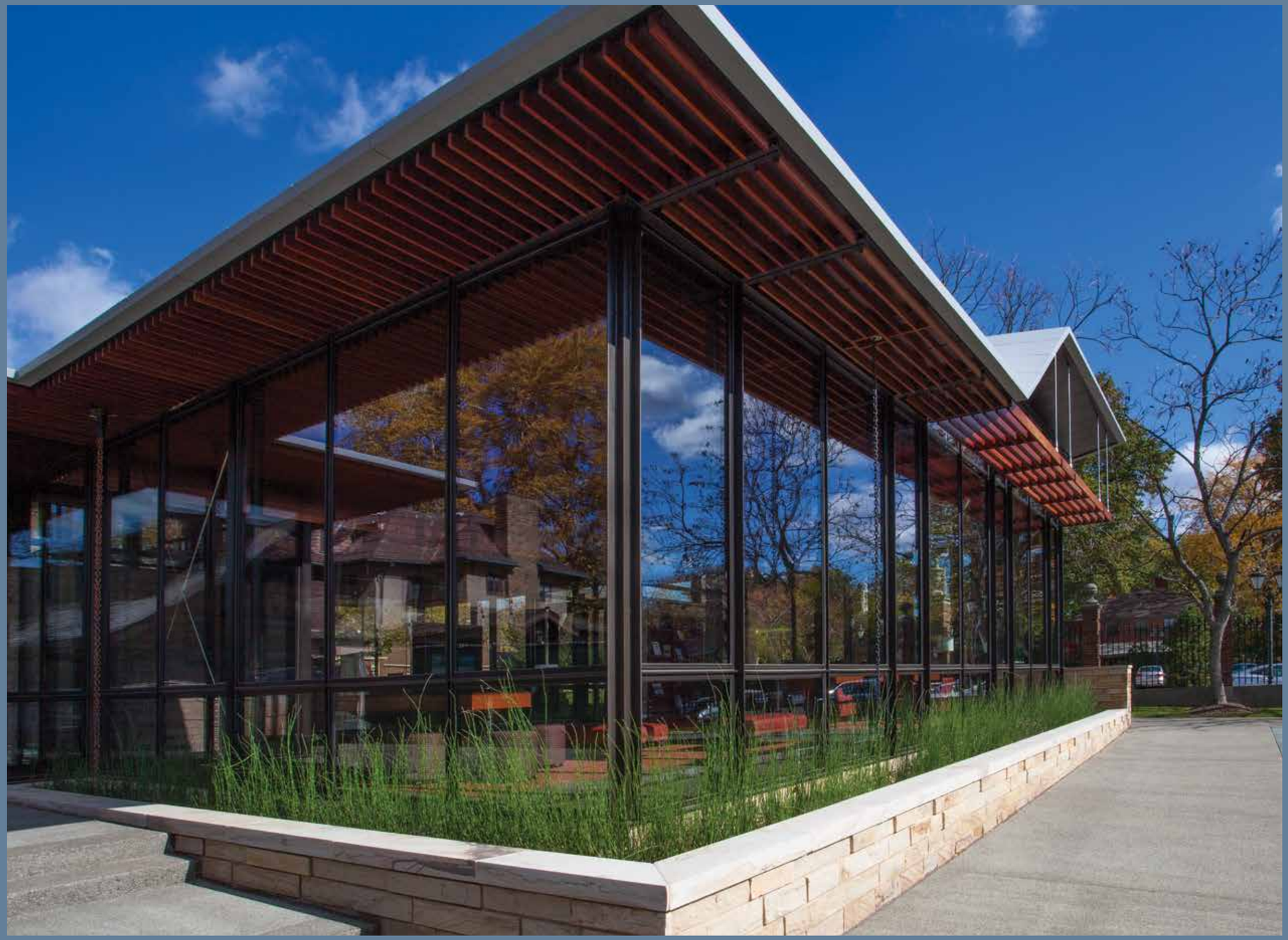

Paint Color Palette

MP00958
Copenhagen Blue

HOPE'S®
Windows, Inc.

Gloss Range: 18-26%

Hope's Standard Paint Colors

Sheen: low sheen/satin

MP36374
Black

MP36355
Dark Bronze

MP36366
Medium Bronze

MP93560
Bronze

MP07102
Deep River

MP12416
Shipyard Gray

MP07567
Kitty Gray

MP93561
Gray

MP07897
Stonington Gray

MP93562
Telegray

MP06013
Bewitching

MP03673
White Atrium

MP11477
Natural White

MP00015
Polar White

MP07147
Baby's Breath

MP07514
Sherwood Tan

MP04474
Crème Beige

MP02834
Lava

MP12385
Clay Beige

MP07148
Winds Breath

MP03078
Spanish Moss

MP07621
Beigewood

MP14743
Clubhouse Canvas

MP07418
Cloud Cover

MP05780
Pearl Stone

MP01989
Victory Navy Blue

MP10259
Very Blue

MP13485
Green Plaza

MP10688
Aegean Green

MP10641
Dark Forest Green

Gloss Range: 18-26%

Hope's Standard Paint Colors

Sheen: low sheen/satin

MP13702
Beale Street Blues

MP08201
North Sea Blue

MP13841
Slate Blue

MP00958
Copenhagen Blue

MP05283
Graphite Blue

MP15967
Colonial Red

MP07100
Sedona Red

MP00741
River Teal Blue

MP02641
Brittany Blue

MP06668
Vanderbilt Gray

MP73829
Mocha Madness

MP03122
Sequoia

MP10338
Fiesta Red

MP75977
Hot Rolled Steel

MP82856
Wrought Iron

MP08303
Sonoma Shiraz

MP10747
Velvet Rose

MP08896
Canyon Sunset Red

MP06818
Blacksmith

MP14353
Adirondack Green

MP16043
Lucky Red

MP00233
Berry Frappe

MP11171
Cypress Green

MP12698
Sycamore Stand

MP12719
Hawthorne Leaf Green

MP13310
Hint of Copper

MP12457
Tuscan Olive

MP09896
Woodland Moss Green

MP13216
Herbivore

MP14690
Bahia Mar Green

METALLIC COLORS
Gloss Range: 18-26%
Sheen: low sheen/satin

Hope's Premium Metallic Colors

FLAT COLORS
Gloss Range: 0-17%
Sheen: matte

MP21942
Craftsman Copper
Metallic

MP21944
Smooth Copper
Metallic

MP21961
Byzantine Gold
Metallic

MP20358
Desert Sand
Metallic

MP20504
Saturn Gold
Metallic

MP20153
Remington Bronze
Metallic

MP20155
Weathered Bronze
Metallic

MP20186
Warm Gray
Metallic

MP20088
Touch of Taupe
Metallic

MP20046
Frosty Nickel
Metallic

MP20189
Corinthian Bronze
Metallic

MP20147
Duronodic Bronze
Metallic

MP19962
Rodin Patina
Metallic

MP19911
Phantom Gray
Metallic

MP18243
Smelted Steel
Metallic

MP19891
Airstream Sparkle
Metallic

MP20189M
Corinthian Bronze
Metallic Flat

MP20155M
Weathered Bronze
Metallic Flat

MP91946M
Blackened Warm
Gray Flat

MP18243M
Smelted Steel
Metallic Flat

MP21944M
Smooth Copper
Metallic Flat

MP20046M
Frosty Nickel
Metallic Flat

MP69607M
Fine Silver
Flat

MP32156M
Black Magic
Flat

MP54318M
Black Flat

MP36355M
Dark Bronze
Flat

MP36366M
Medium Bronze
Flat

MP90627M
Sift Espresso Flat

MP70986M
Slate Flat

Select your color

Hope's Windows sets the bar for product performance by partnering with PPG Industries, the world leaders in coating technology. This alliance enables Hope's Windows to provide a finishing system that offers color, corrosion resistance and durability for our custom steel windows and doors.

Work with our team to create a custom color or choose a color from this palette. Either way, you get Hope's custom steel windows and doors with the beauty and endurance of tough, weather fighting coatings from PPG Industries.

» Select color(s) from this electronic brochure. Note: Metallic colors are not available for correctional products.

Digital color samples are as close as possible to actual paint colors within the limitations of on-screen reproduction. Monitor/screen type, settings, and resolution may affect color representation.

» Hope's will provide physical color samples for approval.

» Standard colors are provided for your custom steel windows and doors. Premium metallic and flat colors are available at additional cost. Consult Hope's.

The Strength. The Versatility. The *Artistry* of Steel.
with PPG color!

HOPE'S®

Hope's Windows, Inc.
84 Hopkins Avenue • PO Box 580
Jamestown, NY 14702-0580
716.665.5124 • Fax 716.665.3365
sales@hopeswindows.com • www.hopeswindows.com

MATTHEWS PAINT

PPG/Matthews Paint
760 Pittsburgh Drive • Delaware, OH 43015
800.323.6593 • Fax 800.947.0377

HOPE'S is a registered trademark of Hope's Windows, Inc.
Mpc MATTHEWS PAINT and Droplet Rounded Rectangle is a trademark of PPG Industries Ohio, Inc. PAINT DROPS in Color is a trademark of PPG Industries Ohio, Inc.

Hope's Windows, Inc. ©2017 All Rights Reserved.

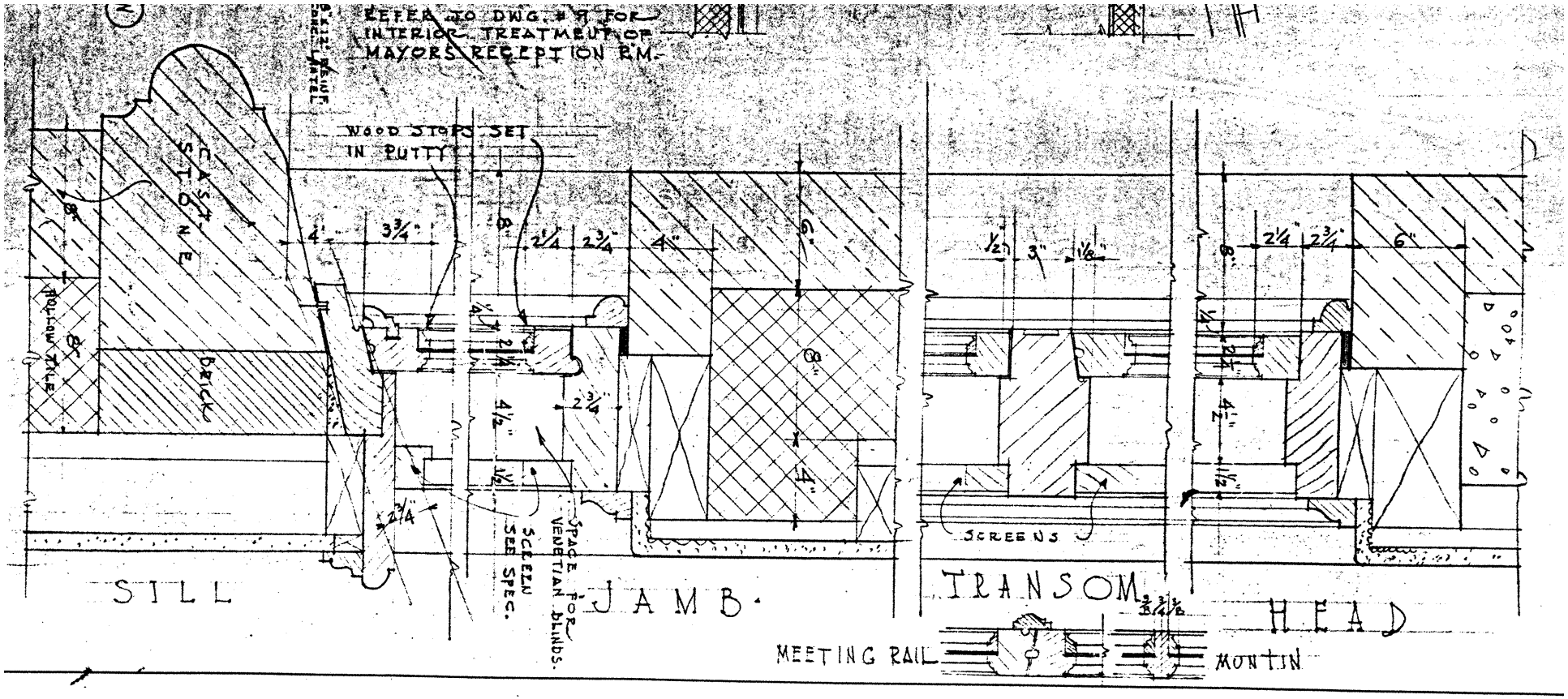
REFER TO DWG. #9 FOR INTERIOR TREATMENT OF MAYORS RECEPTION RM.
WOOD STOPS SET IN PUTTY
CAST STONE
BRICK
HOLLOW TILE
SILL
JAMB
TRANSOM
HEAD
MEETING RAIL
MONTIN
SCREENS
SPACE FOR VENETIAN BLINDS.
SCREEN SEE SPEC.

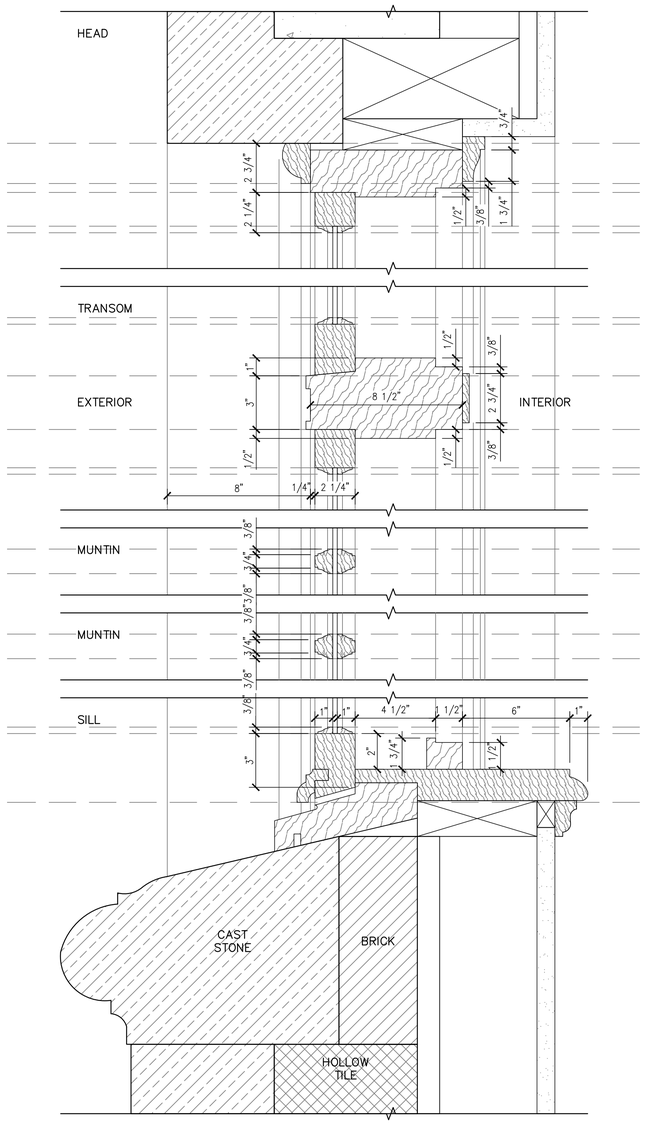

1 SK001 EXISTING WINDOW DETAIL
SCALE: 3" = 1'-0"

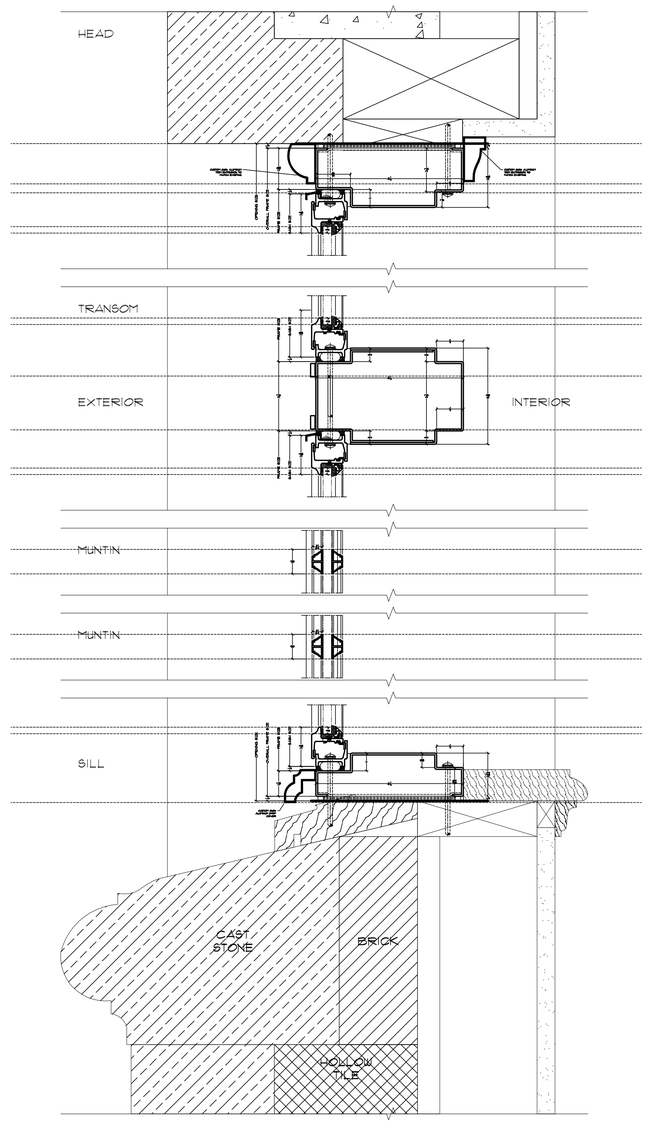

HOPE'S WINDOW DETAIL
SCALE: 3" = 1'-0"
XX XX

2 SK001 HOPE'S WINDOW DETAIL
SCALE: 3" = 1'-0"

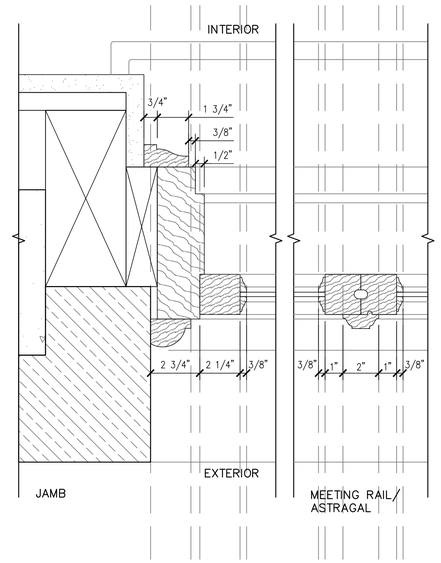

3 SK001 EXISTING WINDOW DETAIL
SCALE: 3" = 1'-0"

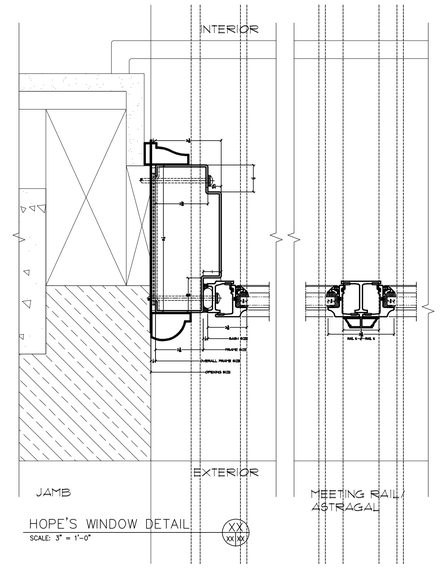

HOPE'S WINDOW DETAIL
SCALE: 3" = 1'-0"
XX XX

4 SK001 HOPE'S WINDOW DETAIL
SCALE: 3" = 1'-0"

FERGUSON FLASCOW CHUSTER SOTO, INC.
Planning
Architecture
Interior Design
301 ponce de leon blvd, suite 304 coral gables, florida 33134
305+443+7758 www.fgcs.net AR9945
Natividad Soto AR9945

REPLACEMENT OF
CITY OF CORAL GABLES
CITY HALL WINDOWS
405 BILTMORE WAY, CORAL GABLES, FL 33134

REVISIONS
NO. DATE REMARKS

PERMIT SUBMITTAL

PROJ. NO.: -
DRAWN BY:
DATE: 09/08/2023

EXISTING/
HOPE'S
WINDOW DETAILS

SK001

City of Coral Gables

City Hall Windows Replacement

December 19, 2024

FERGUSON GLASGOW SCHUSTER SOTO, INC

City of Coral Gables
City Hall Windows Replacement

Various options were considered for the project:

1. Restore Existing Windows: Existing wood window sashes with custom profiles would be removed and wood restored in the contractors' shop, painted and re-installed. Existing wood frames would be repaired and re-painted in the field. Hardware repaired if possible or replaced where necessary/missing with historically consistent items.
2. Non-Impact Window Protection
   a. Shutters: Existing removable storm shutters.
   b. Interior storm windows: Thin profile impact/wind resistant products installed behind existing windows inside openings. The structure surrounding the windows (terracotta) needs reinforcement for wind resistance.
3. Replace with impact resistant wood windows (Luxbaum).
4. Replace with impact resistant aluminum windows (Windoor).
5. Replace with impact resistant aluminum/wood windows (Marvin).
6. Replace with impact resistant steel windows (Hope's).

FERGUSON GLASGOW SCHUSTER SOTO, INC

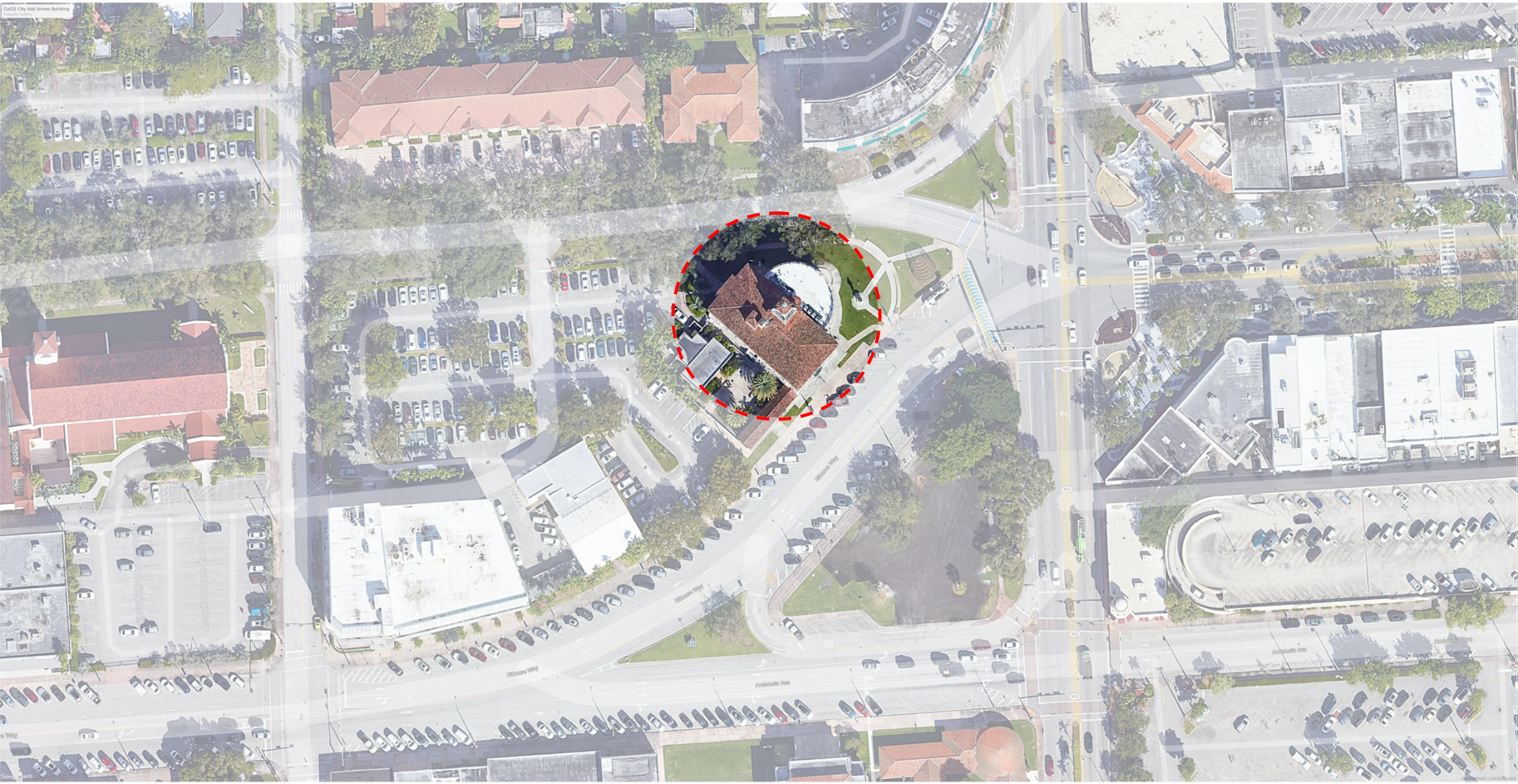

North

FERGUSON
GLASGOW
SCHUSTER
SOTO, INC

North Elevation

East Elevation

South Elevation

West Elevation

Existing Building Images

FERGUSON GLASGOW SCHUSTER SOTO, INC

Exterior Windows (East Elevation)

Exterior Window (West Elevation)

Existing Building Images

FERGUSON GLASGOW SCHUSTER SOTO, INC

Exterior Window Detail (West Elevation)

Exterior Window Detail (West Elevation)

Existing Building Images

FERGUSON GLASGOW SCHUSTER SOTO, INC

Interior Window Detail (West Elevation)

Interior Window Detail (West Elevation)

Interior Window (West Elevation)

Interior Window Detail (West Elevation)

Existing Building Images

FERGUSON GLASGOW SCHUSTER SOTO, INC

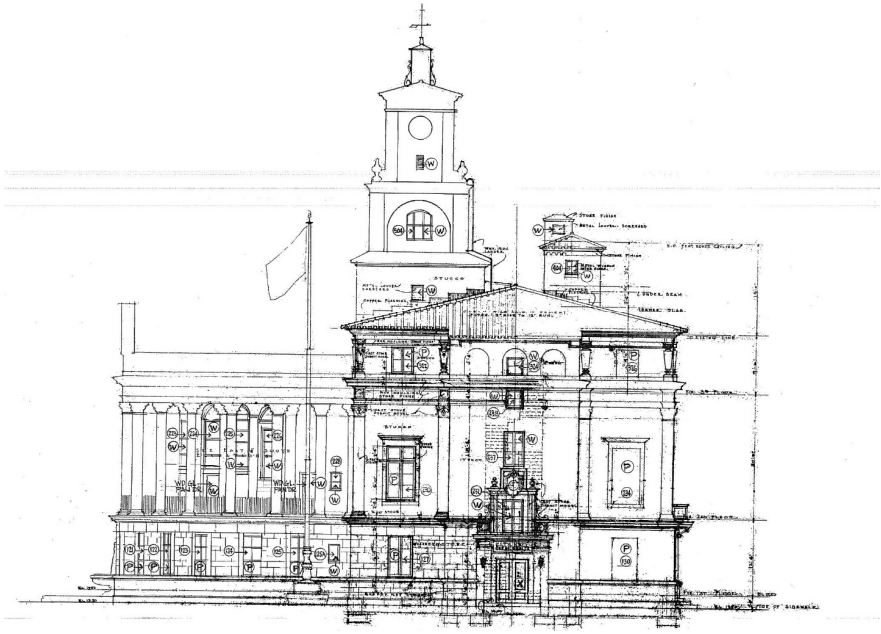

North Elevation

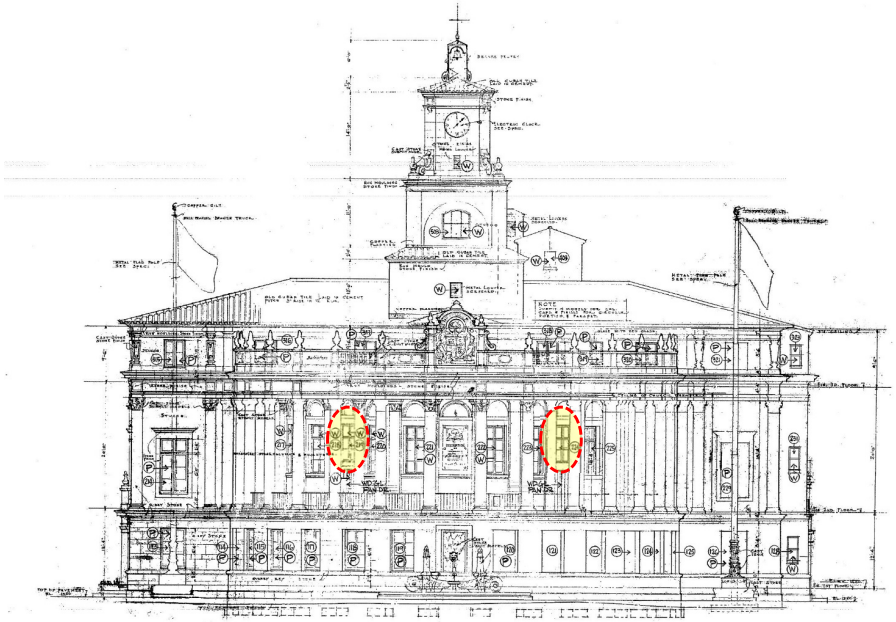

East Elevation

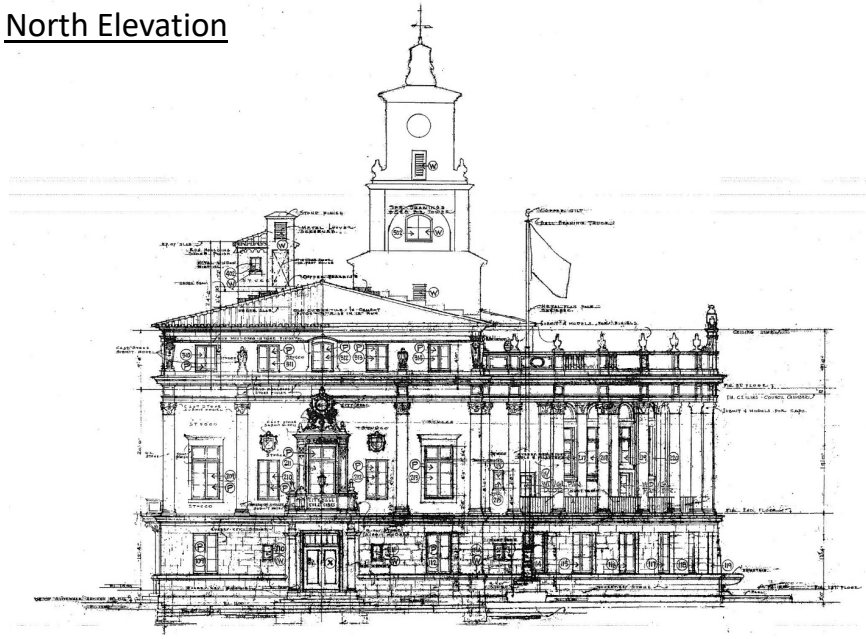

South Elevation

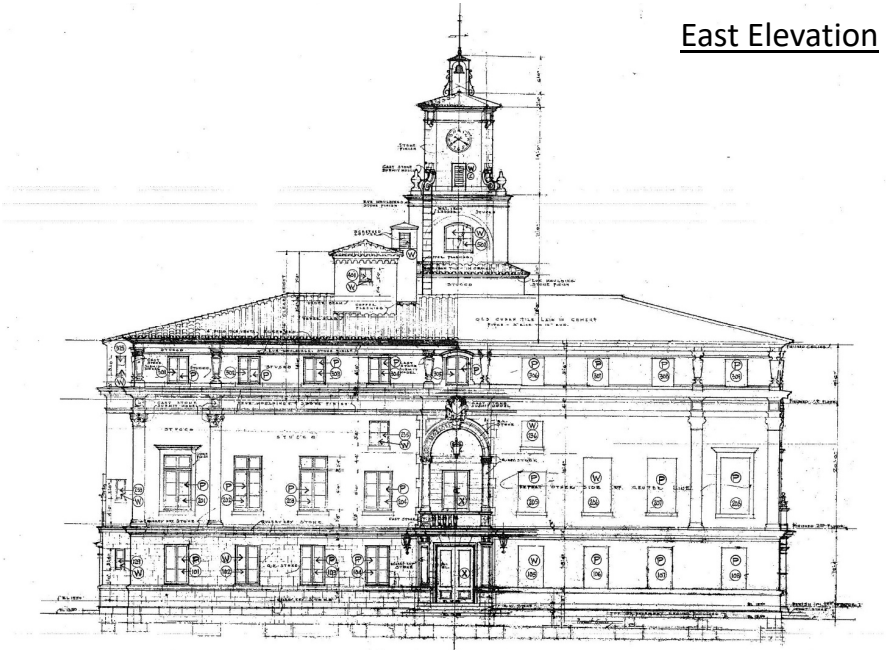

West Elevation

Record Drawings

FERGUSON GLASGOW SCHUSTER SOTO, INC

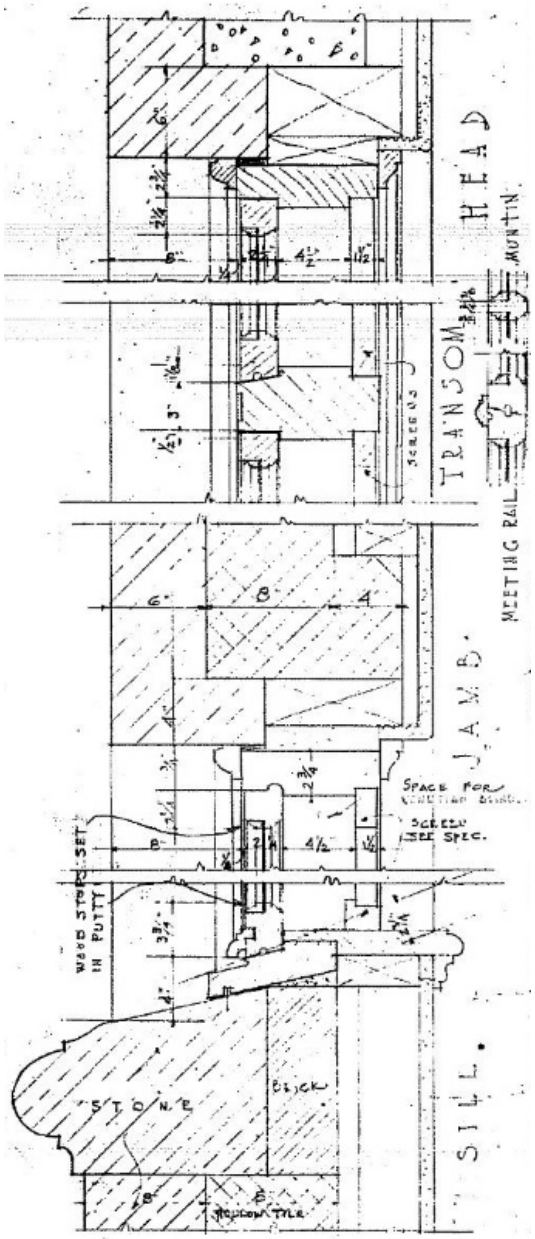

Typical Window Frame for Sash Opening Out

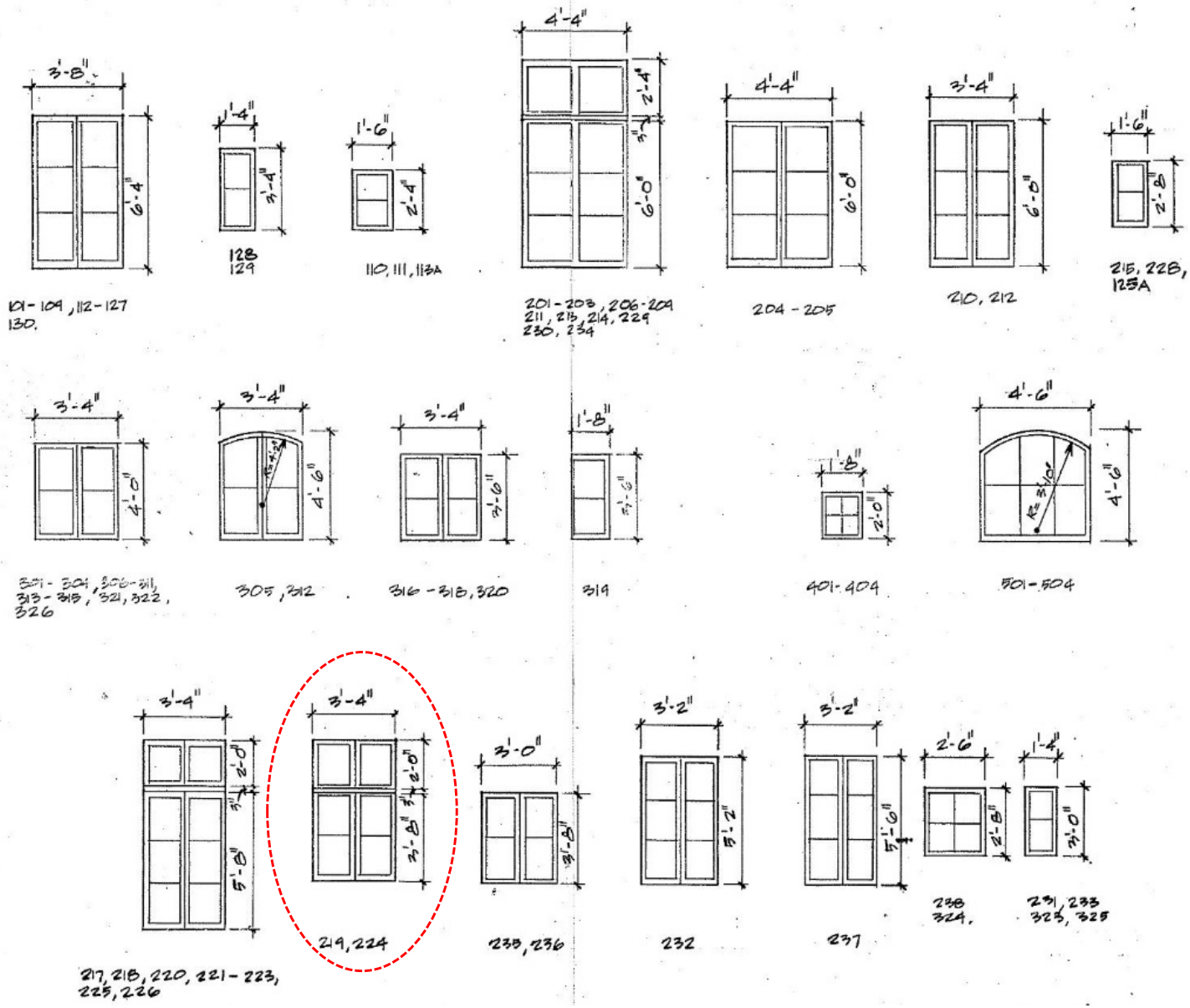

Window Types

Record Drawings

FERGUSON GLASGOW SCHUSTER SOTO, INC

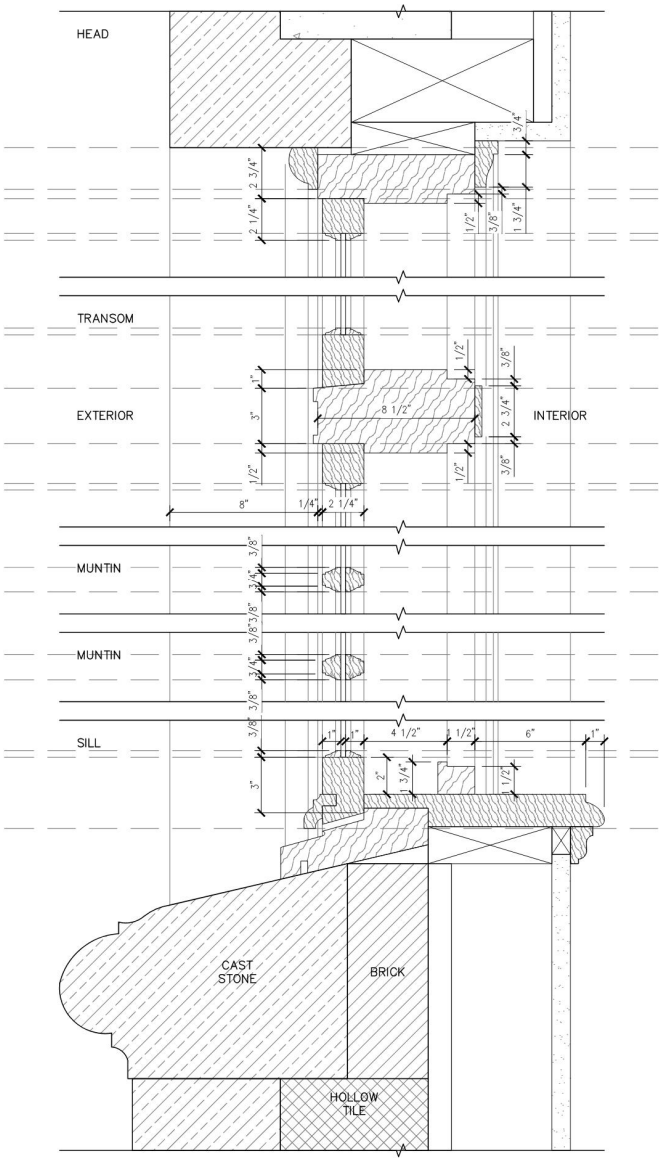

Existing Window Detail

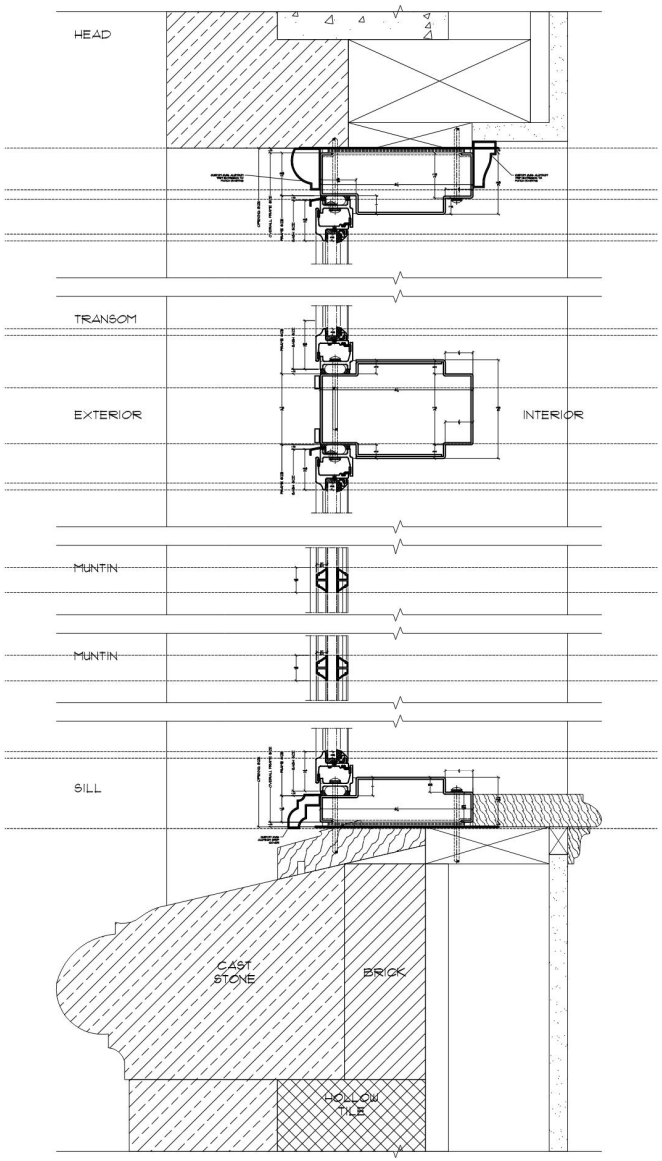

Hope's Window Detail

Profile Comparison

FERGUSON GLASGOW SCHUSTER SOTO, INC

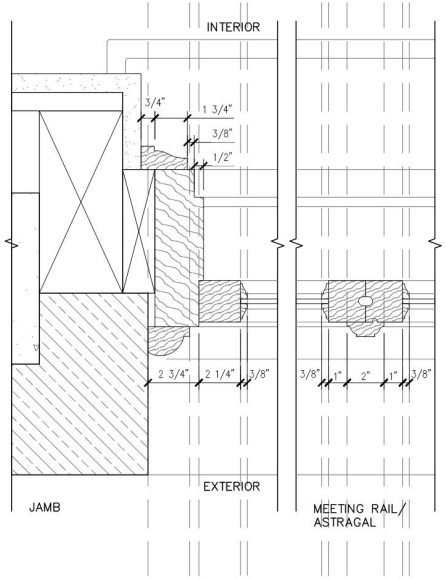

Existing Window Detail

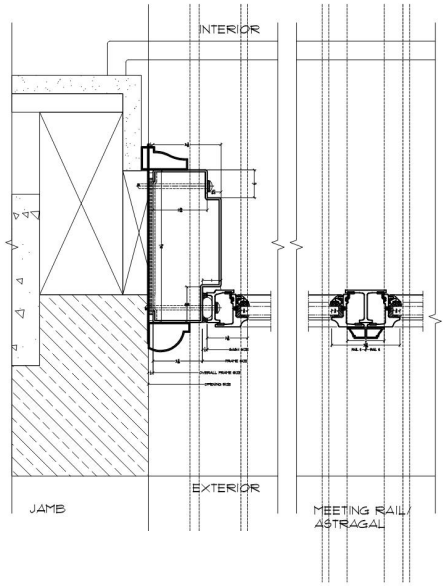

Hope's Window Detail

Profile Comparison

FERGUSON GLASGOW SCHUSTER SOTO, INC

City of Coral Gables

City Hall Windows Replacement

End of Presentation

FERGUSON
GLASGOW
SCHUSTER
SOTO, INC