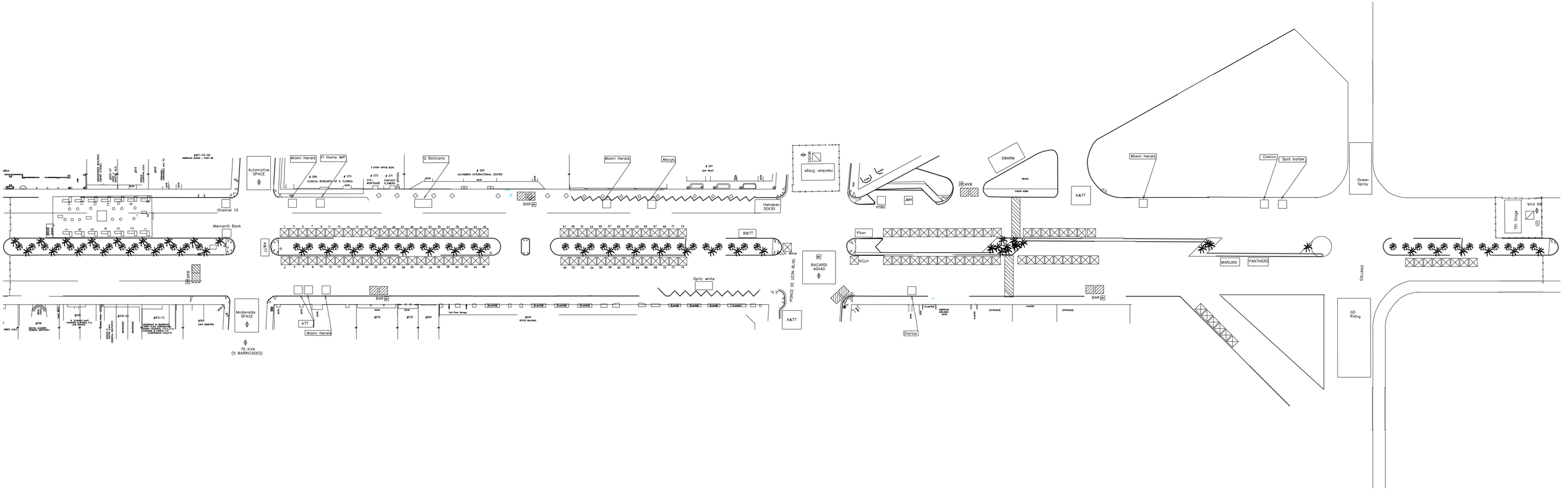

Automotive SPACE
Miami Herald
Fl Home IMP
Q Boticario
Miami Herald
Macys
Heineken Stage
Heineken 30X30
SWARM
Miami Herald
Costco
Spot barber
Ocean Spray
Channel 10
Mercantil Bank
A&TT
B&TT
KCLH Wine
BACARDI 40X40
Pilon
KCLH
MARLINS
PANTHERS
GALIANO
Optic white
PONCE DE LEON BLVD.
Mcdonalds SPACE
ATT
Miami Herald
75 KVA (5 BARRICADES)
Diarios
GO RVing