# MERRICK PARK HOTEL

## AT

## 123 AURORA STREET

## CITY OF CORAL GABLES, FLORIDA


OWNER:

HHLP CORAL GABLES ASSOCIATES, LLC

510 WALNUT STREET
9TH FLOOR
PHILADELPHIA, PA 19106


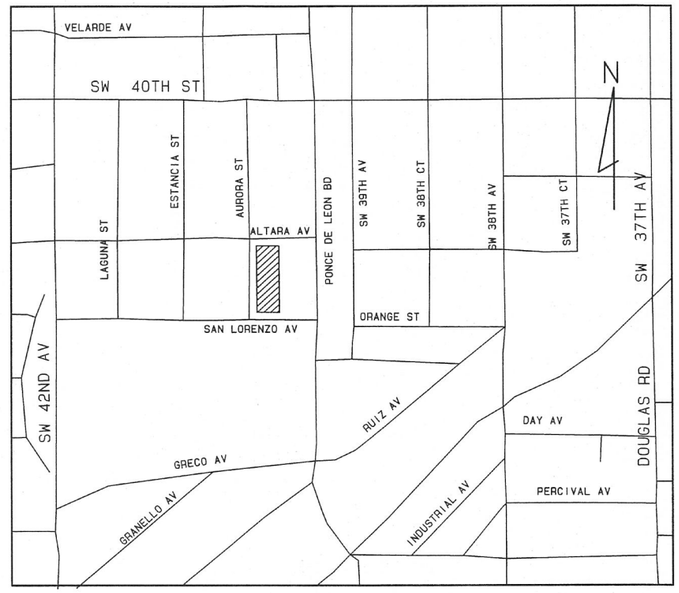


LOCATION MAP


ENGINEERS:

V. S. N. ENGINEERING, INC.
CIVIL ENGINEERS

8550 W. FLAGLER STREET, SUITE 113
MIAMI, FLORIDA 33144
TEL (305) 551-6267
FAX (305) 551-4542


LIST OF DRAWINGS:


| | |
|---|---|
| C-0 | COVER SHEET AND LOCATION MAP |
| C-1 | SITE AND PAVING PLAN |
| C-2 | SITE AND PAVING DETAILS |
| C-3 | DRAINAGE PLAN |
| C-4 | GRADING PLAN |
| C-5 | STORM DRAINAGE DETAILS |
| C-6 | SEDIMENT TANK NO 1 DETAILS |
| C-7 | SEDIMENT TANK NO 2 DETAILS |
| C-8 | DRAINAGE WELL MHS NO 1 AND NO 2 DETAILS |
| C-9 | WATER DISTRIBUTION SYSTEM COVER SHEET |
| C-10 | SEWER COLLECTION SYSTEM COVER SHEET |
| C-11 | SITE UTILITIES PLAN |
| C-12 | WATER PROFILES |
| C-13 | SEWER PROFILES |


CIVIL SHEET INDEX

| SHEET NUMBER | SHEET TITLE | PERMIT SUBMITTAL - 11/18/2016 | REVISIONS | | | | | | | |
|---|---|---|---|---|---|---|---|---|---|---|
| | | | REVISION 1 - 07/20/2017 | REVISION 2 - 11/22/2017 | REVISION 3 - 03/24/2018 | REVISION 4 - 04/18/2018 | REVISION 5 - 04/25/2018 | REVISION 6 - 05/22/2018 | REVISION 7 - 07/12/2018 | REVISION 8 - 08/23/2018 |
| C-0 | COVER SHEET AND LOCATION MAP | ● | | | | | | | | ● |
| C-1 | SITE AND PAVING PLAN | ● | | ● | | | | | | |
| C-2 | SITE AND PAVING DETAILS | ● | | | | | | | | |
| C-3 | DRAINAGE PLAN | ● | | | | ● | | | | |
| C-4 | GRADING PLAN | ● | | ● | | | | | | |
| C-5 | STORM DRAINAGE DETAILS | ● | | | | | ● | | | |
| C-6 | SEDIMENT TANK NO 1 DETAILS | ● | | | | | | | | |
| C-7 | SEDIMENT TANK NO 2 DETAILS | ● | | | | | | | | |
| C-8 | DRAINAGE WELL MHHS NO 1 AND 2 DETAILS | ● | ● | | | | | | | |
| C-9 | WATER SYSTEM DISTIBUTION COVER SHEET | ● | | | | | | | ● | |
| C-10 | SEWAR COLLECTON SYSTEM COVER SHEET | ● | | | | | | | | |
| C-11 | SITE UTILITIES PLAN | ● | | | | | | ● | ● | |
| C-12 | WATER PROFILES | ● | | | ● | | | | | |
| C-13 | SEWAR PROFILES | ● | | | | | | | ● | |

LEGAL DESCRIPTION:

LOTS 12, 13, 14, 15, 16, 17, 18, 19, 20, 21, AND 22 IN BLOCK 6, REVISED PLAT CORAL GABLES INDUSTRIAL SECTION, ACCORDING TO THE PLAT THEREOF AS RECORDED IN PLAT BOOK 28, AT PAGE 22, OF THE PUBLIC RECORDS OF MIAMI-DADE COUNTY, FLORIDA.

RODOLFO J. VARGAS
LICENSE
No. 35648
STATE OF FLORIDA
PROFESSIONAL ENGINEER

8/23/18

RODOLFO J. VARGAS
PE • 35648

8/23/2018 ADDED TABLE FOR CIVIL SHEET INDEX
Certificate of Auth • 5529
dated: November 18, 2016
cad ref: 16016-10

C-0

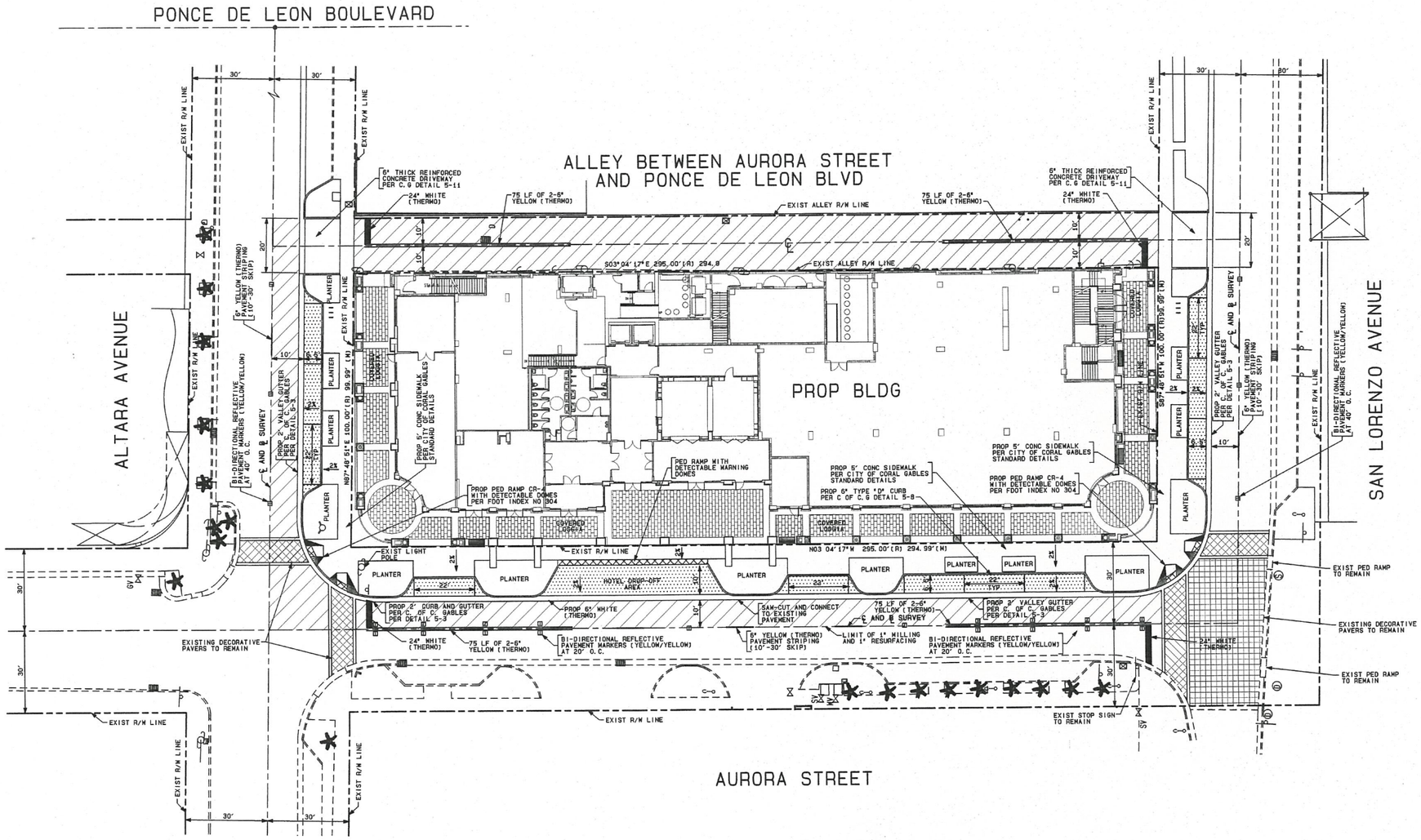


## LEGEND:

| | EXISTING | PROPOSED |
|---|---|---|
| HEAVY DUTY PAVEMENT FOR DETAIL SEE SHEET C-2 | | |
| 1" MILLING AND 1" RESURFACING FOR DETAIL SEE SHEET C-2 | | |
| HANDICAPPED PARKING SPACES | | |
| TRAFFIC SIGN | | |
| REFERENCE LINE | | |
| RIGHT-OF-WAY LINE | | |
| PROPERTY LINE | | |
| CURB | | |
| CURB & GUTTER | | |
| DIRECTIONAL ARROW | | |
| PEDESTRIAN RAMP | | |
| NO. OF PARKING SPACES | | 10 |
| CONCRETE WHEELSTOP | | |
| BABY STROLLER SPACE | | B. S. |

## GENERAL NOTES:

1. ALL RADII ARE TO FACE OF CURB.
2. TOPOGRAPHIC PROVIDED AVINO & ASSOCIATES LAND SURVEYOR DADE COUNTY, FLORIDA.
3. ALL SIGNS SHALL CONFORM WITH THE "MANUAL ON UNIFORM TRAFFIC CONTROL DEVICES FOR STREETS AND HIGHWAYS", U.S. DEPARTMENT OF TRANSPORTATION, FEDERAL HIGHWAY ADMINISTRATION.
4. ALL EXISTING PAVEMENT CONNECTIONS MUST BE SAW-CUT TO PROVIDE A NEAT STRAIGHT EDGE.
5. CONTRACTOR TO COORDINATE MAINTENANCE OF TRAFFIC DURING CONSTRUCTION WITH THE FLORIDA DEPARTMENT OF TRANSPORTATION AND DADE COUNTY AND SHALL BE IN ACCORDANCE WITH THE "MANUAL ON UNIFORM TRAFFIC CONTROL DEVICES FOR STREET AND HIGHWAYS (U.S. DEPARTMENT OF TRANSPORTATION-FHWA). ATTENTION IS ALSO DIRECTED TO THE FLORIDA DEPARTMENT OF TRANSPORTATION ROADWAY AND TRAFFIC DESIGN STANDARD INDEX. 600 THRU 650.
6. IN THE EVENT THAT EXISTING CONDITIONS VARY FROM THOSE INDICATED TO THE EXTEND THAT A "FIELD REVISION" IS REQUIRED, THE CONTRACTOR SHALL NOTIFY THE ENGINEER IMMEDIATELY.
7. FOR SITE PLAN DETAILS SEE SHEET C-2
8. ALL WORK TO BE DONE IN ACCORDANCE WITH METROPOLITAN DADE COUNTY STANDARD AND CITY OF CORAL GABLES DETAILS AND SPECIFICATIONS AND APPLICABLE PERMITS.
9. CONTRACTOR SHALL PROVIDE AS-BUILT DRAWINGS CERTIFIED BY A PROFESSIONAL LAND SURVEYOR FOR ALL WORK, PERFORMED INCLUDING VERTICAL AND HORIZONTAL INFORMATION AND ANY EXISTING UTILITY ENCOUNTERED DURING CONSTRUCTION.
10. CONTRACTOR SHALL RETAIN THE SERVICES OF A REGISTERED SURVEYOR IN THE STATE OF FLORIDA TO LAY OUT THE WORK.
11. BUILDING TO BE LAID OUT FROM ARCHITECTURAL PLANS.
12. CONTRACTOR TO REPLACE IN KIND ANY STRIPING THAT HAS BEEN DISTURBED OR DESTROYED DURING CONSTRUCTION.

RODOLFO J. VARGAS
LICENSE
No. 35648
STATE OF FLORIDA
PROFESSIONAL ENGINEER

SCALE: 1" = 20' (20' 10' 0' 20')

# SITE AND PAVING PLAN


vsn engineering inc
CERTIFICATE OF AUTH #5629
• CIVIL
• LAND DEVELOPMENT
• TRAFFIC AND TRANSPORTATION
8550 W. FLAGLER ST. SUITE 113, MIAMI, FLORIDA 33144
TEL. (305)551-6267 FAX (305)551-4542
e-mail: vsn@vsneng.com


# MERRICK PARK HOTEL
AT
123 AURORA STREET
CITY OF CORAL GABLES, FLORIDA

| no | date | revision/issue |
|---|---|---|
| | | |

| | |
|---|---|
| designed | L. SERRATE |
| drawn | N. SERRATE |
| checked | L. SERRATE |
| approved | R. VARGAS |
| proj no | 16016-01 |
| scale | 1" = 20' |
| date | NOV 22, 2017 |
| cad ref | 16016-11 |

RODOLFO J. VARGAS
LICENSE
No. 35648
STATE OF FLORIDA
PROFESSIONAL ENGINEER

RODOLFO J. VARGAS
PE # 35648

drawing
C-1

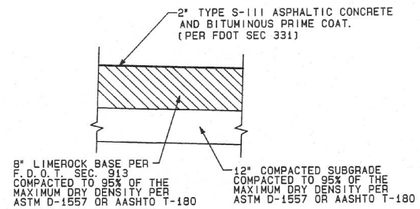


## TYPICAL PAVEMENT SECTION

N. T. S.

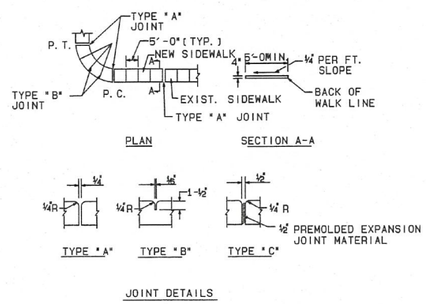


## CONCRETE SIDEWALK

N. T. S.

PER CITY OF CORAL GABLES STANDARDS

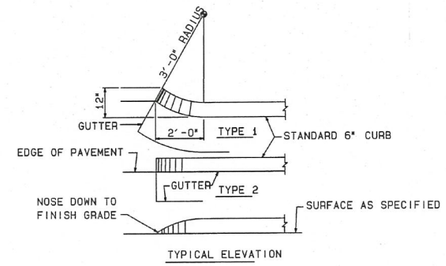


## STANDARD CURB NOSING

N. T. S.

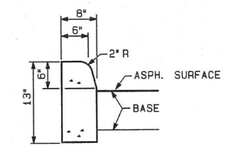


## TYPE "D" CURB

N. T. S.

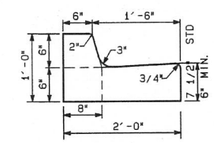


## TYPE "F" CONCRETE CURB & GUTTER

N. T. S.

PER CITY OF CORAL GABLES STANDARDS

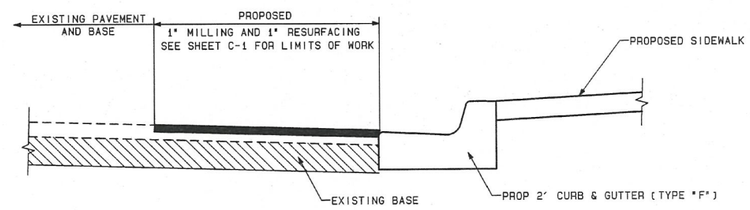


## TYPICAL MILLING AND RESURFACING DETAIL

N. T. S.

DESIGN SPEED = 35 MPH

MILLING

MILL EXISTING ASPHALT PAVEMENT (1" AVG. DEPTH) (3/4" BELOW LIP OF GUTTER AT LOW SIDE)

RESURFACING

TYPE SP STRUCTURAL COURSE (TRAFFIC LEVEL C) 100 LBS/SY, PER 1" LIFT)
ASPHALTIC CONCRETE FRICTION COURSE FC-9.5 (110 LBS/SY RUBBER)

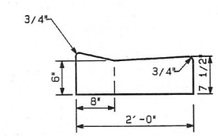


## DRIVEWAY GUTTER

N. T. S.

PER CITY OF CORAL GABLES STANDARDS

RODOLFO J. VARGAS
LICENSE
No. 35648
STATE OF
FLORIDA
PROFESSIONAL ENGINEER

11/23/16

# SITE AND PAVING DETAILS


VSN engineering inc
CERTIFICATE OF AUTH #5529
• CIVIL
• LAND DEVELOPMENT
• TRAFFIC AND TRANSPORTATION
8550 W. FLAGLER ST. SUITE 113, MIAMI, FLORIDA 33144
TEL. (305)551-6267 FAX (305)551-4542
e-mail: vsn@vsneng.com


MERRICK PARK HOTEL
AT
123 AURORA STREET
CITY OF CORAL GABLES, FLORIDA

| no | date | revision/issue |
|---|---|---|
| | | |

| | |
|---|---|
| designed | R. VARGAS |
| drawn | N. SERRATE |
| checked | L. SERRATE |
| approved | R. VARGAS |
| proj no | 16014-01 |
| scale | AS SHOWN |
| date | NOV 18, 2016 |
| cad ref | 16014-12 |

RODOLO J. VARGAS
PE # 35648

drawing

C-2

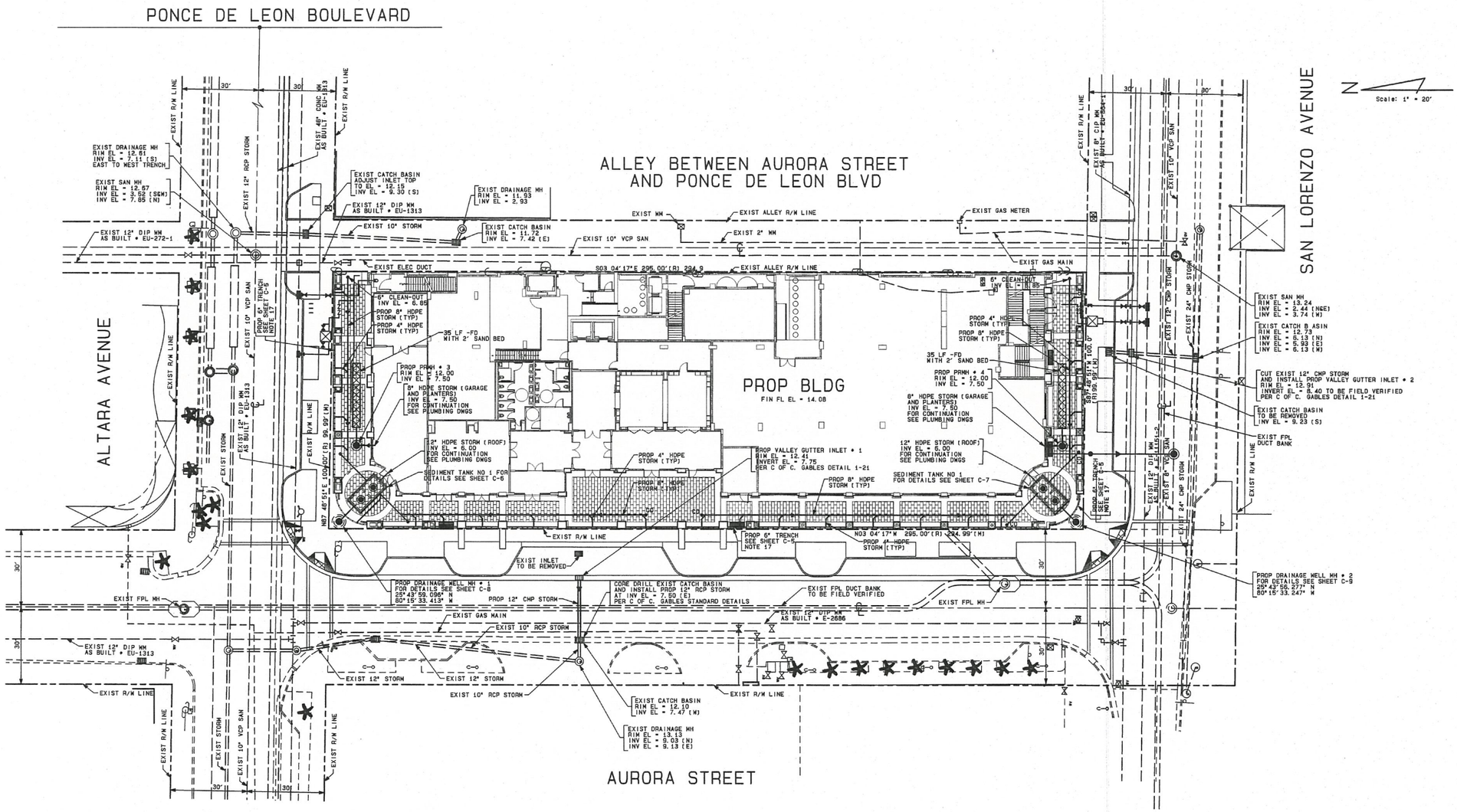


## LEGEND:

| | EXISTING | PROPOSED |
|---|---|---|
| SPOT ELEVATION | 7.50 (12.00) | (15.00) |
| POLLUTION RETARDANT CATCH BASIN | | |
| CURB INLET | | |
| FRENCH DRAIN & LENGTH | | 20 LF |
| MANHOLE | | |
| CURB | | |
| CURB | | |
| VALLEY GUTTER | | |
| FLOW DIRECTION | | |
| SIDEWALK | | |
| FIRE HYDRANT | | |
| POWER POLE | | |
| DRAINAGE AREA NUMBER & ACREAGE | | D. A. #1 5.89 AC |
| DRAINAGE AREA LIMITS | | |

RODOLFO J. VARGAS
LICENSE
No. 35648
STATE OF
FLORIDA
PROFESSIONAL ENGINEER

SCALE: 1" = 20' 20' 10' 0' 20'

# DRAINAGE PLAN


VSN engineering inc
CERTIFICATE OF AUTH #5529
• CIVIL
• LAND DEVELOPMENT
• TRAFFIC AND TRANSPORTATION
8650 W. FLAGLER ST. SUITE 113, MIAMI, FLORIDA 33144
TEL. (305)551-6267 FAX (305)551-4542
e-mail: vsn@vsneng.com


# MERRICK PARK HOTEL
AT
123 AURORA STREET
CITY OF CORAL GABLES, FLORIDA

| no | date | revision/issue |
|---|---|---|
| | | |

| | |
|---|---|
| designed | L. SERRATE |
| drawn | N. SERRATE |
| checked | L. SERRATE |
| approved | R. VARGAS |
| proj no | 16016-01 |
| scale | 1" = 20' |
| date | APRIL 18, 2018 |
| cad ref | 16016-13 |

RODOLFO J. VARGAS
LICENSE
No. 35648
STATE OF
FLORIDA
PROFESSIONAL ENGINEER

RODOLFO J. VARGAS
PE # 35648

drawing
C-3

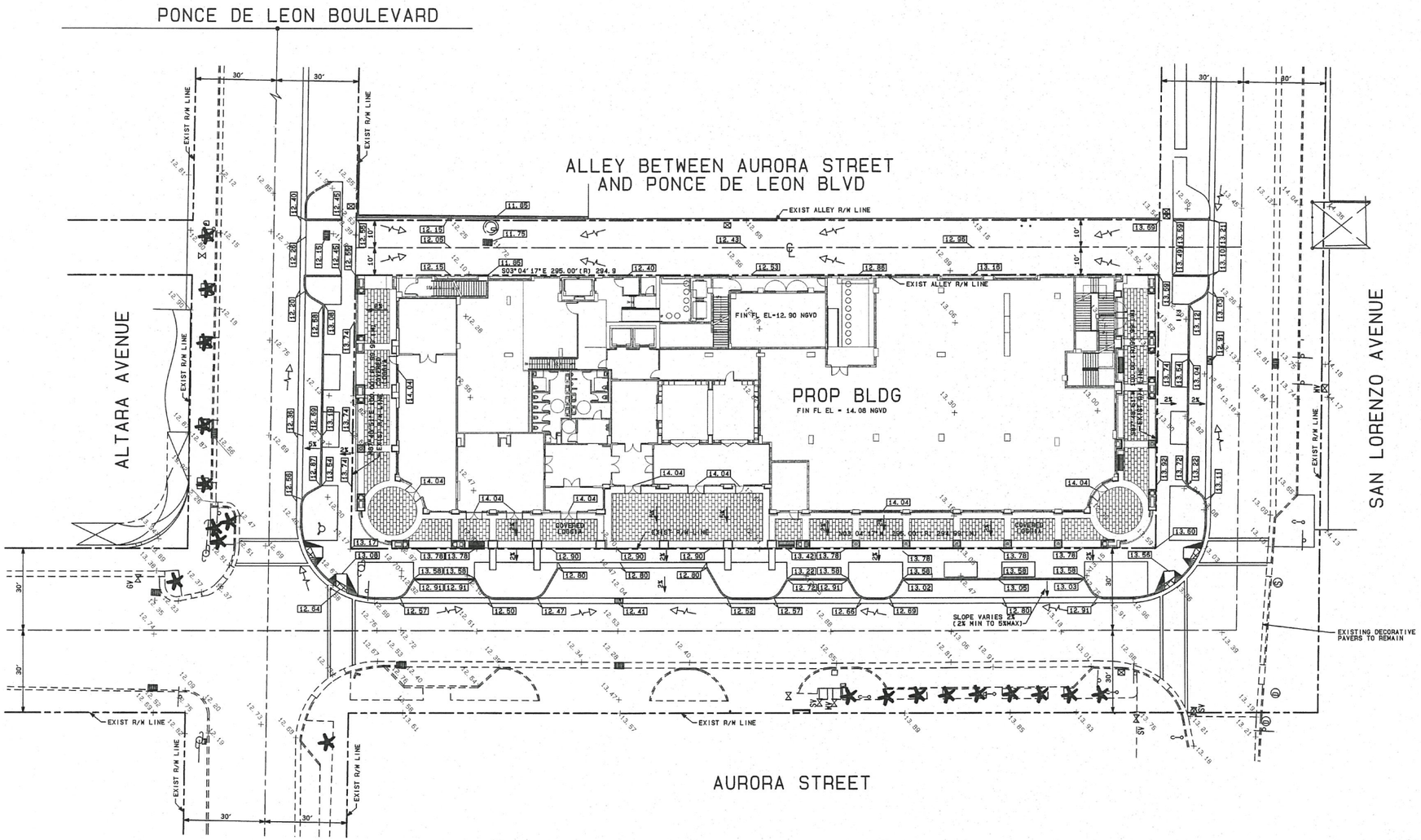


LEGEND:

SPOT ELEVATION — EXISTING 7.99 — PROPOSED 18.99

SCALE: 1" = 20' (20' 10' 0' 20')

# GRADING PLAN

RODOLFO J. VARGAS
LICENSE
No. 35648
STATE OF
FLORIDA
PROFESSIONAL ENGINEER

1/25/18


VSE engineering inc
CERTIFICATE OF AUTH #5529
• CIVIL
• LAND DEVELOPMENT
• TRAFFIC AND TRANSPORTATION
8550 W. FLAGLER ST. SUITE 113, MIAMI, FLORIDA 33144
TEL. (305)551-6267 FAX (305)551-4542
e-mail: vsi@vsieng.com


# MERRICK PARK HOTEL
AT
123 AURORA STREET
CITY OF CORAL GABLES, FLORIDA

| no | date | revision/issue |
|---|---|---|
| | | |

| | |
|---|---|
| designed | L. SERRATE |
| drawn | N. SERRATE |
| checked | L. SERRATE |
| approved | R. VARGAS |
| proj no | 16016-01 |
| scale | 1" = 20' |
| date | NOV 22, 2017 |
| cad ref | 16016-14 |

RODOLFO J. VARGAS
LICENSE
No. 35648
STATE OF
FLORIDA
PROFESSIONAL ENGINEER

RODOLFO J. VARGAS
PE # 35648

drawing

C-4

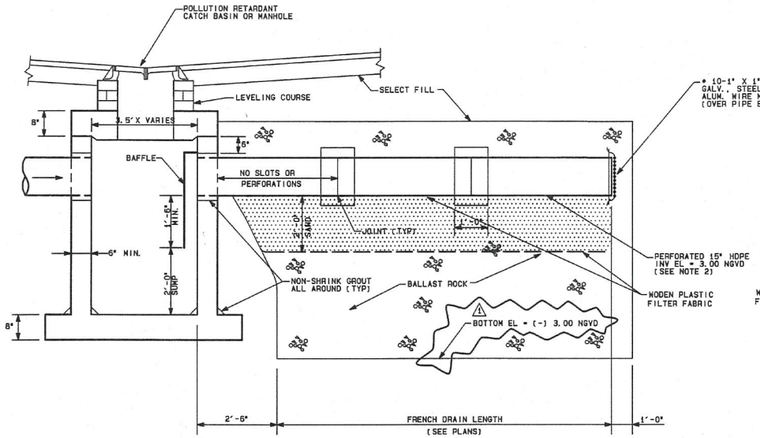


LONGITUDINAL SECTION
N. T. S.

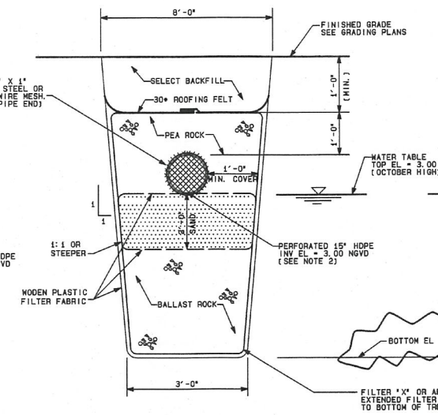


ALTERNATE CROSS-SECTION DETAIL
FOR SANDY SOIL CONDITION
N. T. S.

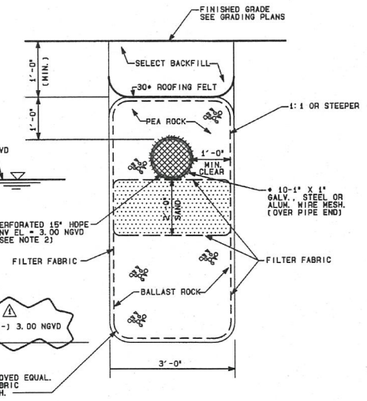


TRANSVERSE SECTION DETAIL
N. T. S.

NOTE:
1. FRENCH DRAIN TO BE IN ACCORDANCE WITH DADE COUNTY STANDARD DETAILS SD-1.1 LATEST REVISION MARCH 12, 1992.
2. WOVEN PLASTIC FILTER FABRIC (AT EACH SIDE, TOP AND BOTTOM) SHALL BE USED IN SANDY OR FILLED AREAS.
3. WASH DOWN THE BALLAST ROCK WITH CLEAN WATER AFTER ROCK HAS BEEN PLACED TO THE PROPER ELEVATION TO ALLOW FOR INITIAL SETTLEMENT THAT MAY OCCUR. ADD ADDITIONAL BALLAST ROCK TO RESTORE ROCK TO THE PROPER ELEVATION IN ACCORDANCE WITH THE DETAILS.
4. FOR PERFORATED CMP PIPE JOINT ARE TO BE BANDED, BUT NOT GASKETED.
5. FOR BAFFLE DETAILS SEE THIS SHEET

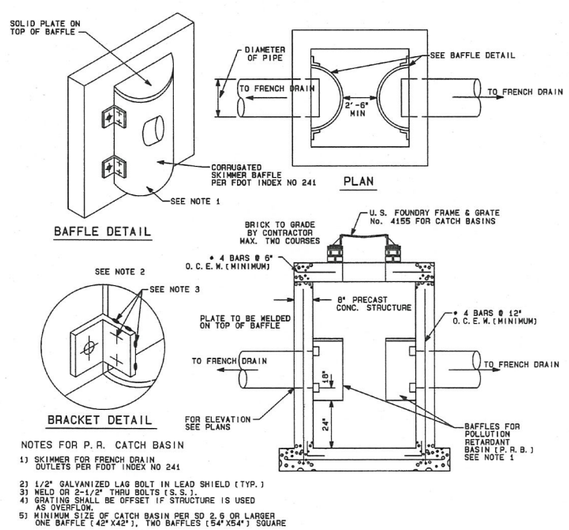


NOTES FOR P.R. CATCH BASIN
1) SKIMMER FOR FRENCH DRAIN OUTLETS PER FDOT INDEX NO 241
2) 1/2" GALVANIZED LAG BOLT IN LEAD SHIELD (TYP.)
3) WELD OR 2-1/2" THRU BOLTS (S.S.).
4) GRATING SHALL BE OFFSET IF STRUCTURE IS USED AS OVERFLOW.
5) MINIMUM SIZE OF CATCH BASIN PER SD 2.6 OR LARGER ONE BAFFLE (42"X42"), TWO BAFFLES (54"X54") SQUARE

POLLUTION RETARDANT CATCH BASING DETAIL
N. T. S.

## DRAINAGE NOTES:

1. These plans have been prepared with the best information available to the Engineer. Contractor must verify all existing underground utilities prior to beginning of construction. If any discrepancies are encountered to the extent that a "field revision" is required, Engineer must be notified immediately.
2. It is the responsibility of the Contractor to protect all existing improvements during construction. If any damage occurs as a result of the construction activities, Contractor shall restore such improvements to identical line, grade, esthetical and structural conditions as they were prior to beginning of construction.
3. All elevations refer to National Geodetic Vertical Datum (N.G.V.D.), 1929.
4. Dade County Flood Criteria for this project is 5.00 ( N.G.V.D.)
5. October High Water Elevation is 3.00 (N.G.V.D.).
6. All proposed elevations are to edge of pavement or driveway center line.
7. All French Drain perforated pipe shall be 15" diameter and shall have a minimum invert elevation of 3.00 ( N.G.V.D.). (Unless otherwise noted).
8. French Drain bottom elevation shall be (-) 3.00 (N.G.V.D.).
9. The following items shall be constructed in accordance with the referenced details from the Dade County Public Works Manual:
   a. French Drain..... S.D.1.1
   b. Catch Basin..... S.D.2.6
   c. Catch Basin Frame and Grate..... S.D.2.3
   d. 2' Valley Gutter..... R.14.6
   e. P-6 Inlet ..... SD 3.4
   f. Swale Inlet..... SD 3.1
10. Contractor must observe extreme care to prevent debris, silts and fines from entering French Drain. Inlet Grates shall remain covered with filter fabric during construction until the system is ready to enter in operation.
11. Contractor to verify soil conditions at site. If muck is encountered, contractor shall desuck area and fill to grade with minimum 98% density.
12. All areas not paved must be sodded.
13. All work to be done in accordance with City of Miami and Miami-Dade County Public Works Standard Details and Specifications.
14. All topographic and survey information is based on Sketches of Survey prepared by Avino & Associates Land Surveyor.
15. Pipe requirements:
    French drain pipes shall be ADS Corrugated Polyethylene (Perforated).
    All other pipes shall be ADS N-12 Polyethylene Non-Perforated. (or approved equal).
16. Contractor shall provide a Paving and Drainage "AS-BUILT PLAN" certified by a Professional Registered Land Surveyor in the State of Florida reflecting all the features of the Stormwater System and should include, existin pavement and swale area grades, catch basin rim and invert elevations, french drain length and bottom elevation, etc.
17. a. Drainage Trenches to be ZURN Z-886 6" and ZURN Z-882 12" Perma-Trench as per ZURN FLO-DRAIN COMPANY (813) 754-7148 or approved equal.
    b. Trench Drains shall be capable of conveying a minimum flow of 1,709 gpm at the last down stream section.
    c. Contractor shall submit Shop Drawings and documentation for review and approval prior to ordering and shall strictly follow manufacture's Specifications and Installation instructions.
    d. Contractor to install Class E Grates Type Z-882-HDP, heel proof, capable of supporting H-20 loading.

RODOLFO J. VARGAS
LICENSE
No. 35648
STATE OF FLORIDA
PROFESSIONAL ENGINEER
10/25/13

STORM DRAINAGE DETAILS


engineering inc
CERTIFICATE OF AUTH #5529
• CIVIL
• LAND DEVELOPMENT
• TRAFFIC AND TRANSPORTATION
8550 W. FLAGLER ST. SUITE 113, MIAMI, FLORIDA 33144
TEL. (305)551-6267 FAX (305)551-4542
e-mail: vsn@vsneng.com


MERRICK PARK HOTEL
AT
123 AURORA STREET
CITY OF CORAL GABLES, FLORIDA

| no | date | revision/issue |
|---|---|---|
| 1 | 4/25/18 | REVISED FRENCH DRAIN BOTTOM ELEVATION |

| | |
|---|---|
| designed | L. SERRATE |
| drawn | N. SERRATE |
| checked | L. SERRATE |
| approved | R. VARGAS |
| proj no | 16016-01 |
| scale | AS SHOWN |
| date | NOV 18, 2016 |
| cad ref | 16016-15 |

RODOLFO J. VARGAS
PE # 35648

drawing
C-5

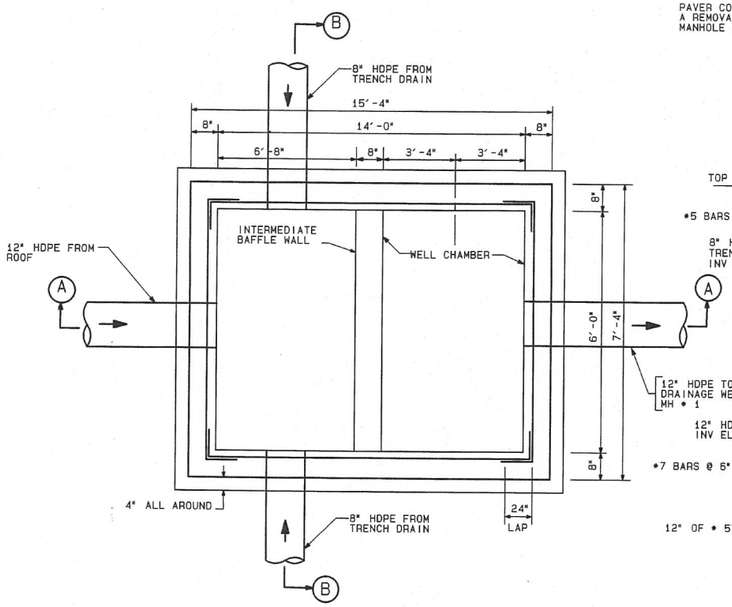


PLAN VIEW
N. T. S.

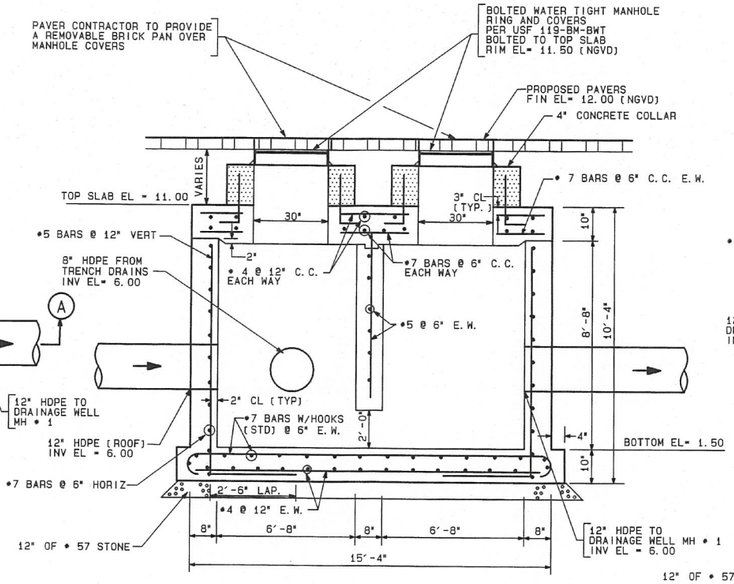


SECTION A-A
N. T. S.

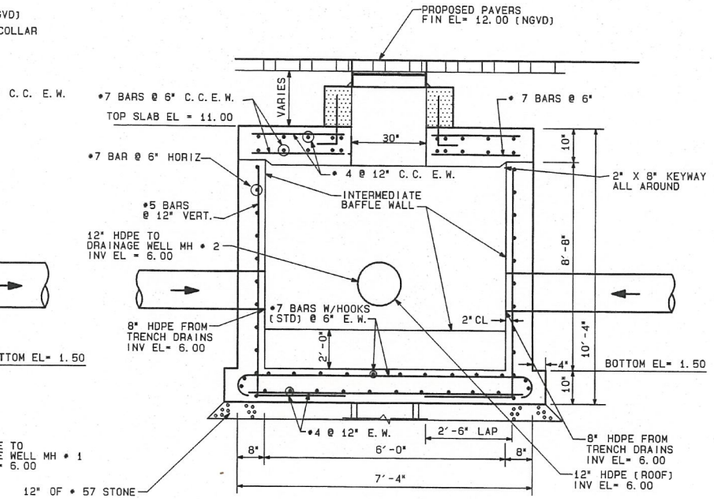


SECTION B-B
N. T. S.

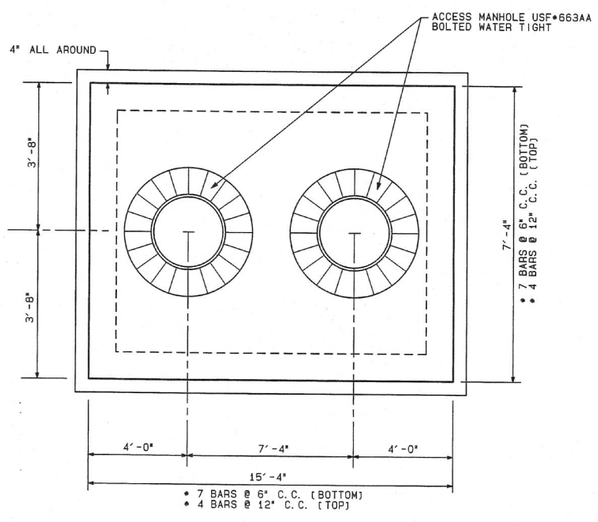


TOP SLAB REINFORCING DETAIL
N. T. S.

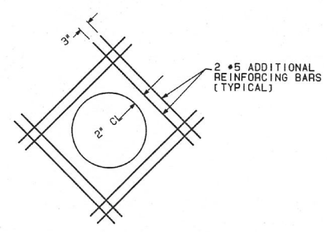


TYPICAL OPENING REINFORCING DETAIL
N. T. S.

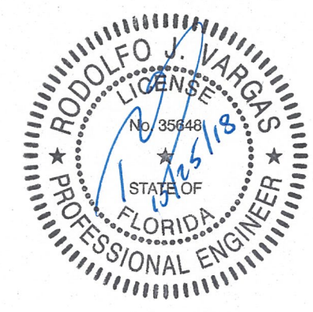


SEDIMENT TANK NO 1 DETAILS


VSNE engineering inc
CERTIFICATE OF AUTHORIZATION NO. 9629
• CIVIL
• LAND DEVELOPMENT
• TRAFFIC AND TRANSPORTATION
8550 W. FLAGLER ST. SUITE 113, MIAMI, FLORIDA 33144
TEL. (305)551-6267 FAX (305)551-4542
e-mail: vsn@vsneng.com


MERRICK PARK HOTEL
AT
123 AURORA STREET
CITY OF CORAL GABLES, FLORIDA

| no | date | revision/issue |
|---|---|---|
| | | |

| | |
|---|---|
| designed | R. VARGAS |
| drawn | N. SERRATE |
| checked | L. SERRATE |
| approved | R. VARGAS |
| proj no | 16016-01 |
| scale | AS SHOWN |
| date | NOV 18, 2016 |
| cad ref | 16016-19 |

RODOLFO J. VARGAS
PE # 35648

drawing
C-6

# MERRICK PARK HOTEL

## AT

## 123 AURORA STREET

## CITY OF CORAL GABLES, FLORIDA


OWNER:

HHLP CORAL GABLES ASSOCIATES, LLC

510 WALNUT STREET
9TH FLOOR
PHILADELPHIA, PA 19106


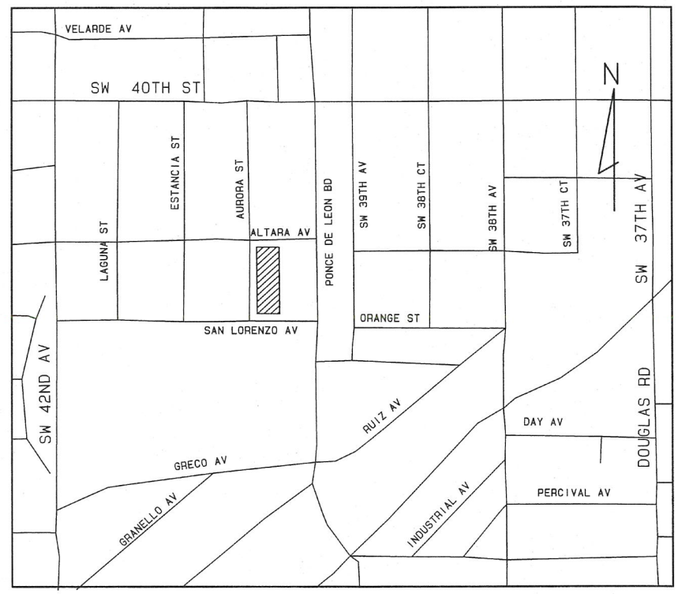


LOCATION MAP


ENGINEERS:

V. S. N. ENGINEERING, INC.
CIVIL ENGINEERS

8550 W. FLAGLER STREET, SUITE 113
MIAMI, FLORIDA 33144
TEL (305) 551-6267
FAX (305) 551-4542


LIST OF DRAWINGS:


| | |
|---|---|
| C-0 | COVER SHEET AND LOCATION MAP |
| C-1 | SITE AND PAVING PLAN |
| C-2 | SITE AND PAVING DETAILS |
| C-3 | DRAINAGE PLAN |
| C-4 | GRADING PLAN |
| C-5 | STORM DRAINAGE DETAILS |
| C-6 | SEDIMENT TANK NO 1 DETAILS |
| C-7 | SEDIMENT TANK NO 2 DETAILS |
| C-8 | DRAINAGE WELL MHS NO 1 AND NO 2 DETAILS |
| C-9 | WATER DISTRIBUTION SYSTEM COVER SHEET |
| C-10 | SEWER COLLECTION SYSTEM COVER SHEET |
| C-11 | SITE UTILITIES PLAN |
| C-12 | WATER PROFILES |
| C-13 | SEWER PROFILES |


CIVIL SHEET INDEX

| SHEET NUMBER | SHEET TITLE | PERMIT SUBMITTAL - 11/18/2016 | REVISIONS | | | | | | | |
|---|---|---|---|---|---|---|---|---|---|---|
| | | | REVISION 1 - 07/20/2017 | REVISION 2 - 11/22/2017 | REVISION 3 - 03/24/2018 | REVISION 4 - 04/18/2018 | REVISION 5 - 04/25/2018 | REVISION 6 - 05/22/2018 | REVISION 7 - 07/12/2018 | REVISION 8 - 08/23/2018 |
| C-0 | COVER SHEET AND LOCATION MAP | ● | | | | | | | | ● |
| C-1 | SITE AND PAVING PLAN | ● | | ● | | | | | | |
| C-2 | SITE AND PAVING DETAILS | ● | | | | | | | | |
| C-3 | DRAINAGE PLAN | ● | | | | ● | | | | |
| C-4 | GRADING PLAN | ● | | ● | | | | | | |
| C-5 | STORM DRAINAGE DETAILS | ● | | | | | ● | | | |
| C-6 | SEDIMENT TANK NO 1 DETAILS | ● | | | | | | | | |
| C-7 | SEDIMENT TANK NO 2 DETAILS | ● | | | | | | | | |
| C-8 | DRAINAGE WELL MHS NO 1 AND 2 DETAILS | ● | ● | | | | | | | |
| C-9 | WATER SYSTEM DISTIBUTION COVER SHEET | ● | | | | | | | ● | |
| C-10 | SEWAR COLLECTON SYSTEM COVER SHEET | ● | | | | | | | | |
| C-11 | SITE UTILITIES PLAN | ● | | | | | | ● | ● | |
| C-12 | WATER PROFILES | ● | | | ● | | | | | |
| C-13 | SEWAR PROFILES | ● | | | | | | | ● | |

LEGAL DESCRIPTION:

LOTS 12, 13, 14, 15, 16, 17, 18, 19, 20, 21, AND 22 IN BLOCK 6, REVISED PLAT CORAL GABLES INDUSTRIAL SECTION, ACCORDING TO THE PLAT THEREOF AS RECORDED IN PLAT BOOK 28, AT PAGE 22, OF THE PUBLIC RECORDS OF MIAMI-DADE COUNTY, FLORIDA.

RODOLFO J. VARGAS
LICENSE
No. 35648
STATE OF
FLORIDA
PROFESSIONAL ENGINEER

RODOLFO J. VARGAS
PE # 35648

8/23/2018 ADDED TABLE FOR CIVIL SHEET INDEX
Certificate of Auth # 5529
dated: November 18, 2016
cad ref: 16016-10

C-0

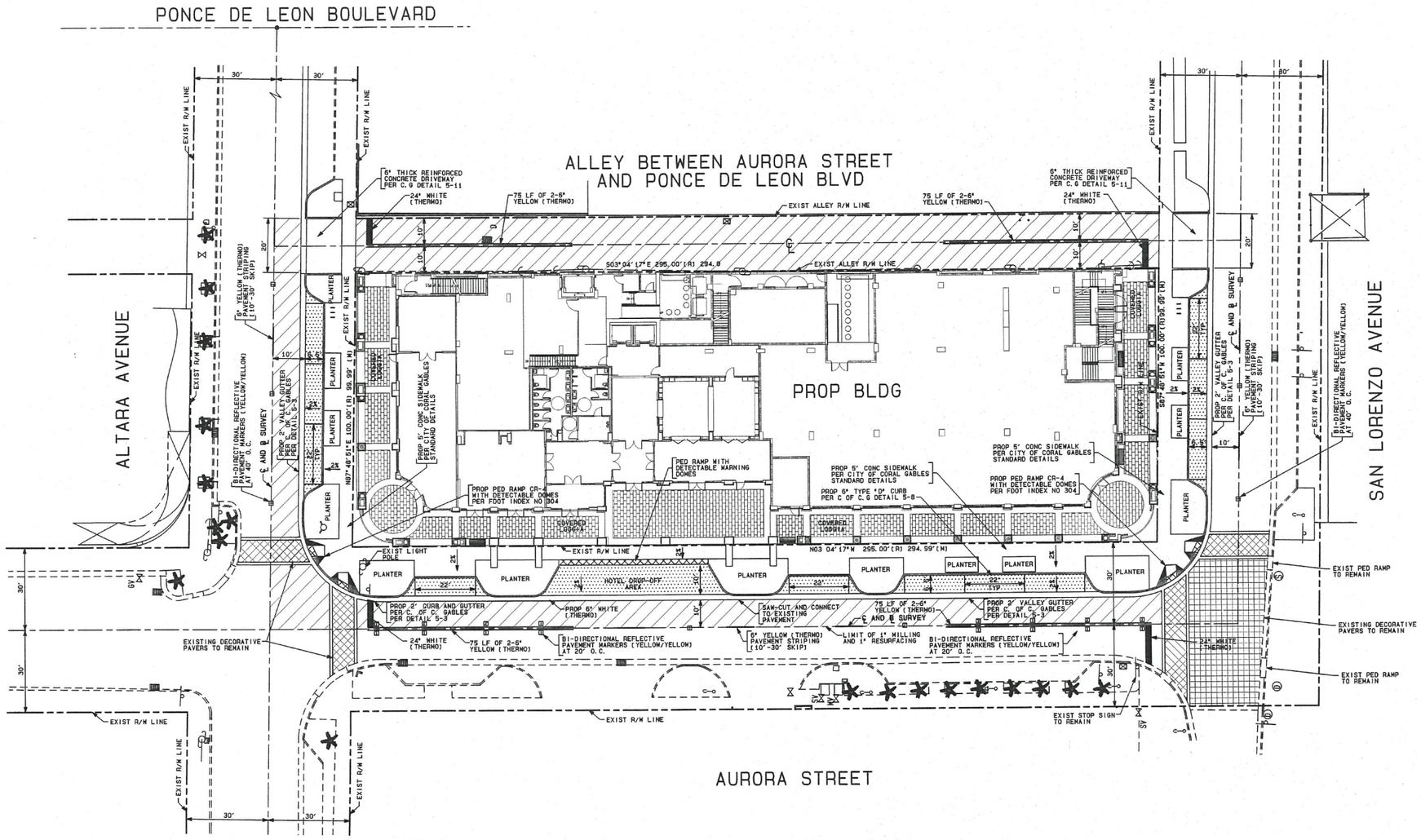


Scale: 1" = 20'

## LEGEND:

| | EXISTING | PROPOSED |
|---|---|---|
| HEAVY DUTY PAVEMENT FOR DETAIL SEE SHEET C-2 | | |
| 1" MILLING AND 1" RESURFACING FOR DETAIL SEE SHEET C-2 | | |
| HANDICAPPED PARKING SPACES | | |
| TRAFFIC SIGN | | |
| REFERENCE LINE | | |
| RIGHT-OF-WAY LINE | | |
| PROPERTY LINE | | |
| CURB | | |
| CURB & GUTTER | | |
| DIRECTIONAL ARROW | | |
| PEDESTRIAN RAMP | | |
| NO. OF PARKING SPACES | | 10 |
| CONCRETE WHEELSTOP | | |
| BABY STROLLER SPACE | | B. S. |

## GENERAL NOTES:

1. ALL RADII ARE TO FACE OF CURB.
2. TOPOGRAPHIC PROVIDED AVINO & ASSOCIATES LAND SURVEYOR DADE COUNTY, FLORIDA.
3. ALL SIGNS SHALL CONFORM WITH THE "MANUAL ON UNIFORM TRAFFIC CONTROL DEVICES FOR STREETS AND HIGHWAYS", U.S. DEPARTMENT OF TRANSPORTATION, FEDERAL HIGHWAY ADMINISTRATION.
4. ALL EXISTING PAVEMENT CONNECTIONS MUST BE SAW-CUT TO PROVIDE A NEAT STRAIGHT EDGE.
5. CONTRACTOR TO COORDINATE MAINTENANCE OF TRAFFIC DURING CONSTRUCTION WITH THE FLORIDA DEPARTMENT OF TRANSPORTATION AND DADE COUNTY AND SHALL BE IN ACCORDANCE WITH THE "MANUAL ON UNIFORM TRAFFIC CONTROL DEVICES FOR STREET AND HIGHWAYS (U.S. DEPARTMENT OF TRANSPORTATION FHWA). ATTENTION IS ALSO DIRECTED TO THE FLORIDA DEPARTMENT OF TRANSPORTATION ROADWAY AND TRAFFIC DESIGN STANDARD INDEX. 600 THRU 660.
6. IN THE EVENT THAT EXISTING CONDITIONS VARY FROM THOSE INDICATED TO THE EXTEND THAT A "FIELD REVISION" IS REQUIRED, THE CONTRACTOR SHALL NOTIFY THE ENGINEER IMMEDIATELY.
7. FOR SITE PLAN DETAILS SEE SHEET C-2
8. ALL WORK TO BE DONE IN ACCORDANCE WITH METROPOLITAN DADE COUNTY STANDARD AND CITY OF CORAL GABLES DETAILS AND SPECIFICATIONS AND APPLICABLE PERMITS.
9. CONTRACTOR SHALL PROVIDE AS-BUILT DRAWINGS CERTIFIED BY A PROFESSIONAL LAND SURVEYOR FOR ALL WORK PERFORMED INCLUDING VERTICAL AND HORIZONTAL INFORMATION AND ANY EXISTING UTILITY ENCOUNTERED DURING CONSTRUCTION.
10. CONTRACTOR SHALL RETAIN THE SERVICES OF A REGISTERED SURVEYOR IN THE STATE OF FLORIDA TO LAY OUT THE WORK.
11. BUILDING TO BE LAID OUT FROM ARCHITECTURAL PLANS.
12. CONTRACTOR TO REPLACE IN KIND ANY STRIPING THAT HAS BEEN DISTURBED OR DESTROYED DURING CONSTRUCTION.

RODOLFO J. VARGAS
LICENSE
No. 35648
STATE OF FLORIDA
PROFESSIONAL ENGINEER

SCALE: 1" = 20' (20' 10' 0' 20')

# SITE AND PAVING PLAN


VSE engineering inc
CERTIFICATE OF AUTH #5629
• CIVIL
• LAND DEVELOPMENT
• TRAFFIC AND TRANSPORTATION
8550 W. FLAGLER ST. SUITE 113, MIAMI, FLORIDA 33144
TEL. (305)551-6267 FAX (305)551-4542
e-mail: vse@vseneng.com


# MERRICK PARK HOTEL
AT
123 AURORA STREET
CITY OF CORAL GABLES, FLORIDA

| no | date | revision/issue |
|---|---|---|
| | | |

| | |
|---|---|
| designed | L. SERRATE |
| drawn | N. SERRATE |
| checked | L. SERRATE |
| approved | R. VARGAS |
| proj no | 16016-01 |
| scale | 1" = 20' |
| date | NOV 22, 2017 |
| cad ref | 16016-11 |

RODOLFO J. VARGAS
LICENSE
No. 35648
STATE OF FLORIDA
PROFESSIONAL ENGINEER

RODOLFO J. VARGAS
PE # 35648

drawing
C-1

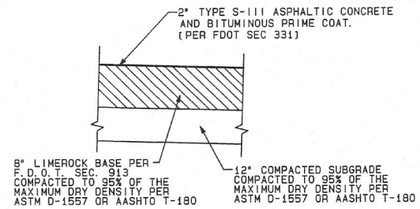


## TYPICAL PAVEMENT SECTION

N. T. S.

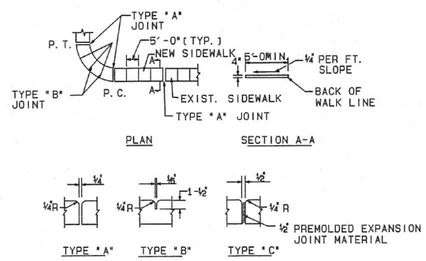


## CONCRETE SIDEWALK

N. T. S.

PER CITY OF CORAL GABLES STANDARDS

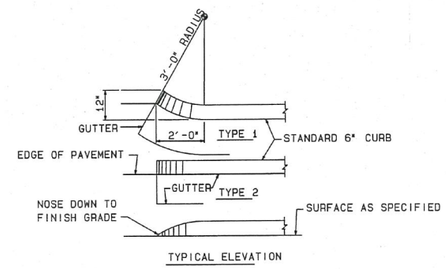


## STANDARD CURB NOSING

N. T. S.

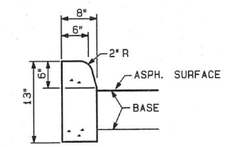


## TYPE "D" CURB

N. T. S.

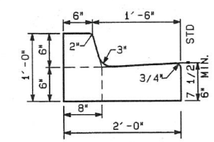


## TYPE "F" CONCRETE CURB & GUTTER

N. T. S.

PER CITY OF CORAL GABLES STANDARDS

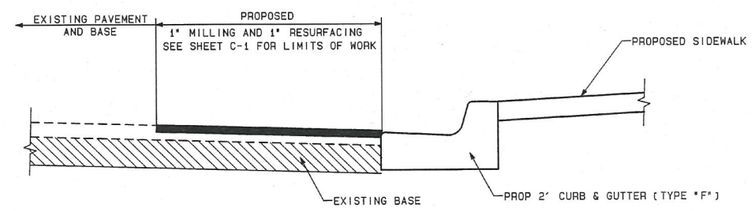


## TYPICAL MILLING AND RESURFACING DETAIL

N. T. S.

DESIGN SPEED = 35 MPH

MILLING

MILL EXISTING ASPHALT PAVEMENT (1" AVG. DEPTH) (3/4" BELOW LIP OF GUTTER AT LOW SIDE)

RESURFACING

TYPE SP STRUCTURAL COURSE (TRAFFIC LEVEL C) 100 LBS/SY, PER 1" LIFT)
ASPHALTIC CONCRETE FRICTION COURSE FC-9.5 (110 LBS/SY RUBBER)

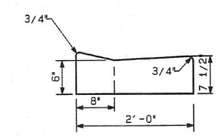


## DRIVEWAY GUTTER

N. T. S.

PER CITY OF CORAL GABLES STANDARDS

RODOLFO J. VARGAS
LICENSE
No. 35648
STATE OF
FLORIDA
PROFESSIONAL ENGINEER

# SITE AND PAVING DETAILS


VSN engineering inc
CERTIFICATE OF AUTH #5529
• CIVIL
• LAND DEVELOPMENT
• TRAFFIC AND TRANSPORTATION
8550 W. FLAGLER ST. SUITE 113, MIAMI, FLORIDA 33144
TEL. (305)551-6267 FAX (305)551-4542
e-mail: vsn@vsneng.com


MERRICK PARK HOTEL
AT
123 AURORA STREET
CITY OF CORAL GABLES, FLORIDA

| no | date | revision/issue |
|---|---|---|
| | | |

| | |
|---|---|
| designed | R. VARGAS |
| drawn | N. SERRATE |
| checked | L. SERRATE |
| approved | R. VARGAS |
| proj no | 16014-01 |
| scale | AS SHOWN |
| date | NOV 18, 2016 |
| cad ref | 16014-12 |

RODOLO J. VARGAS
PE # 35648

drawing

C-2

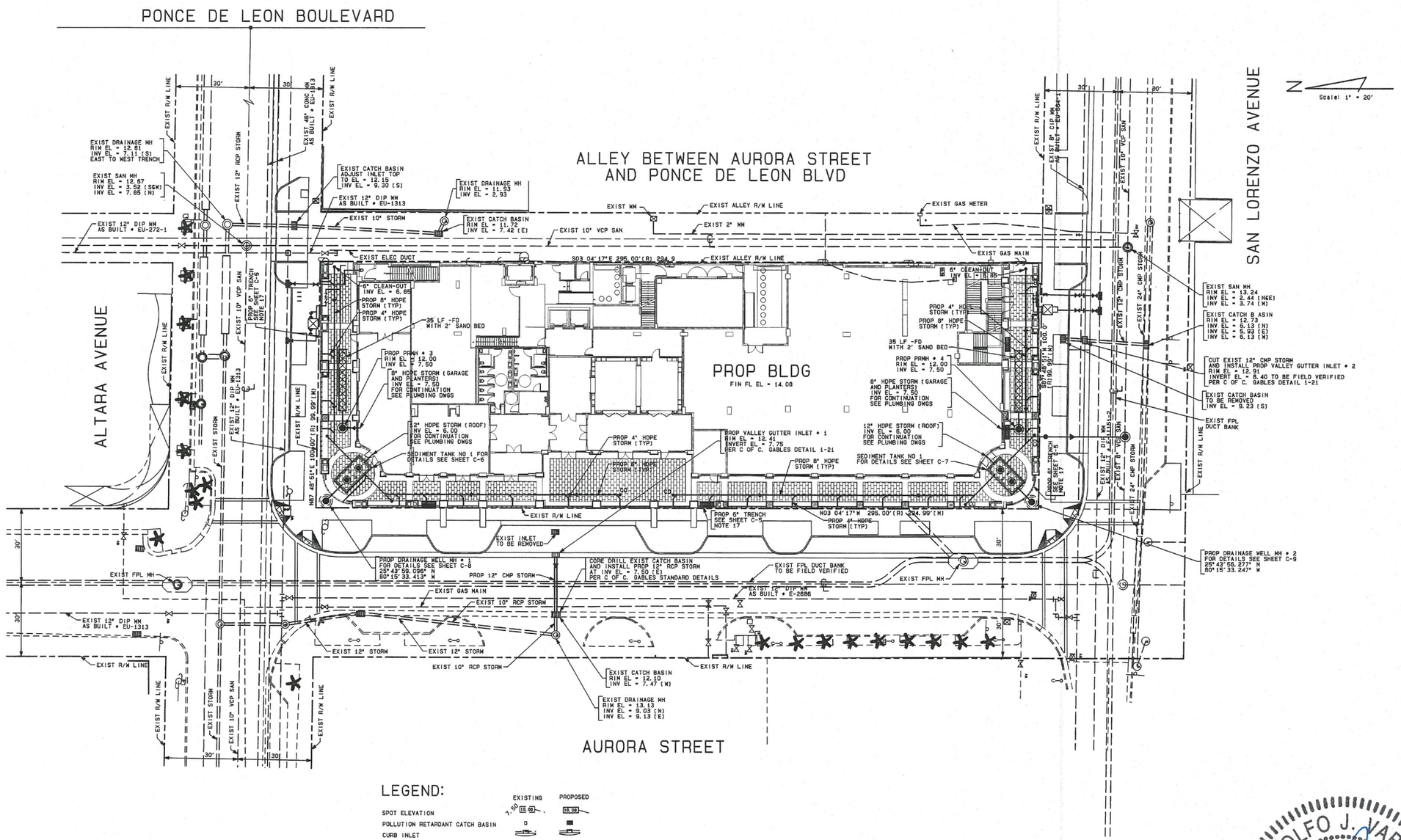


## LEGEND:

| | EXISTING | PROPOSED |
|---|---|---|
| SPOT ELEVATION | 7.50 (12.00) | (16.00) |
| POLLUTION RETARDANT CATCH BASIN | | |
| CURB INLET | | |
| FRENCH DRAIN & LENGTH | | 20 LF |
| MANHOLE | | |
| CURB | | |
| CURB | | |
| VALLEY GUTTER | | |
| FLOW DIRECTION | | |
| SIDEWALK | | |
| FIRE HYDRANT | | |
| POWER POLE | | |
| DRAINAGE AREA NUMBER & ACREAGE | | D. A. #1 5.89 AC |
| DRAINAGE AREA LIMITS | | |

RODOLFO J. VARGAS LICENSE No. 35648 STATE OF FLORIDA PROFESSIONAL ENGINEER

SCALE: 1" = 20' 20' 10' 0' 20'

# DRAINAGE PLAN


VSN engineering inc
CERTIFICATE OF AUTH #5529
• CIVIL
• LAND DEVELOPMENT
• TRAFFIC AND TRANSPORTATION
8550 W. FLAGLER ST. SUITE 113, MIAMI, FLORIDA 33144
TEL. (305)551-6267 FAX (305)551-4542
e-mail: vsn@vsneng.com


# MERRICK PARK HOTEL
AT
123 AURORA STREET
CITY OF CORAL GABLES, FLORIDA

| no | date | revision/issue |
|---|---|---|
| | | |

| | |
|---|---|
| designed | L. SERRATE |
| drawn | N. SERRATE |
| checked | L. SERRATE |
| approved | R. VARGAS |
| proj no | 16016-01 |
| scale | 1" = 20' |
| date | APRIL 18, 2018 |
| cad ref | 16016-13 |

RODOLFO J. VARGAS LICENSE No. 35648 STATE OF FLORIDA PROFESSIONAL ENGINEER
RODOLFO J. VARGAS
PE # 35648

drawing
C-3

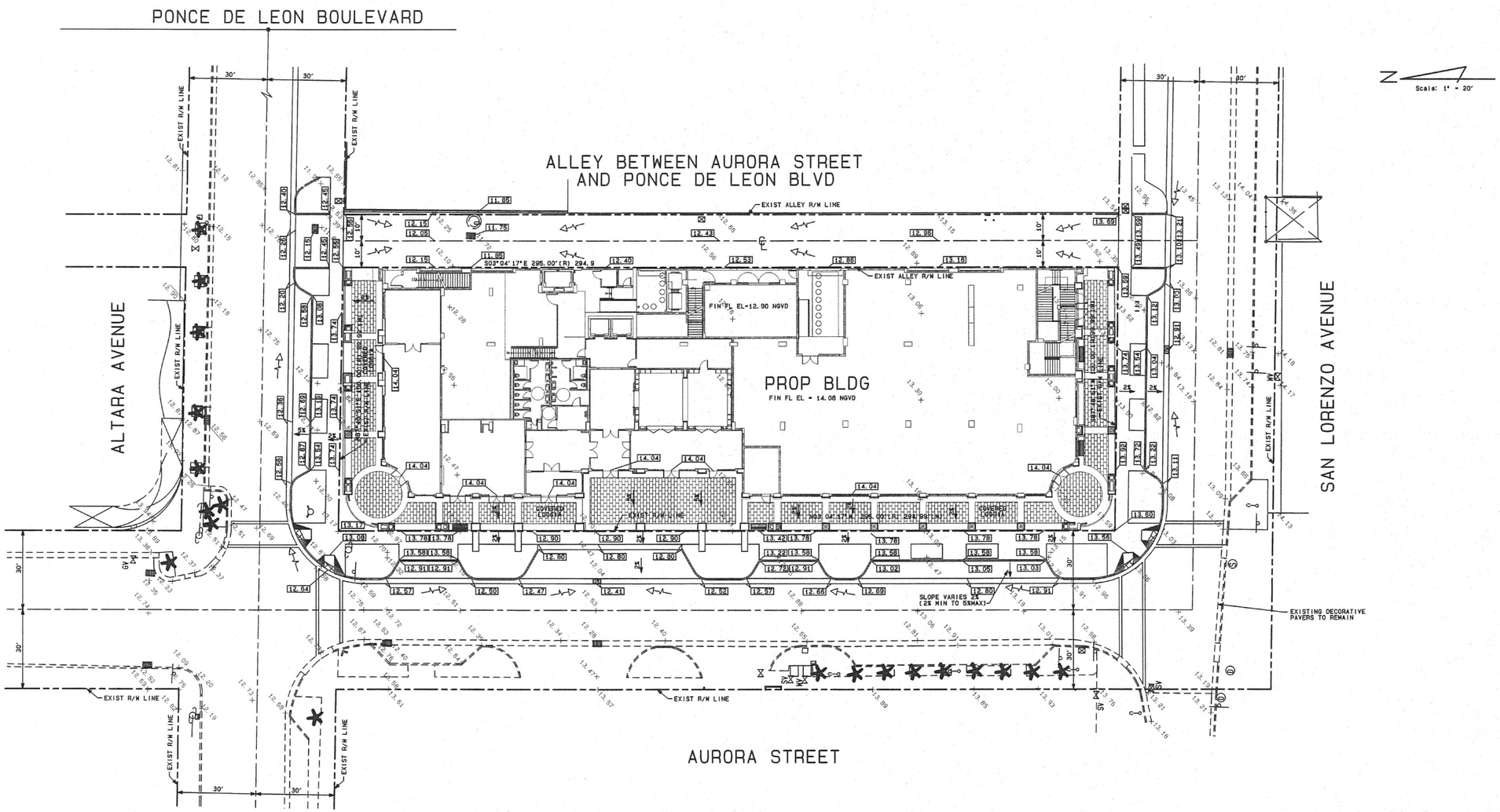


LEGEND:

SPOT ELEVATION — EXISTING 7.50 — PROPOSED (8.50)

SCALE: 1" = 20' (20' 10' 0' 20')

# GRADING PLAN

RODOLFO J. VARGAS LICENSE No. 35648 STATE OF FLORIDA PROFESSIONAL ENGINEER

1/25/18


vsne engineering inc
CERTIFICATE OF AUTH #5529
• CIVIL
• LAND DEVELOPMENT
• TRAFFIC AND TRANSPORTATION
8550 W. FLAGLER ST. SUITE 113, MIAMI, FLORIDA 33144
TEL. (305)551-6267 FAX (305)551-4542
e-mail: vsne@vsneng.com


MERRICK PARK HOTEL
AT
123 AURORA STREET
CITY OF CORAL GABLES, FLORIDA

| no | date | revision/issue |
|---|---|---|
| | | |

| | |
|---|---|
| designed | L. SERRATE |
| drawn | N. SERRATE |
| checked | L. SERRATE |
| approved | R. VARGAS |
| proj no | 16016-01 |
| scale | 1" = 20' |
| date | NOV 22, 2017 |
| cad ref | 16016-14 |

RODOLFO J. VARGAS LICENSE No. 35648 STATE OF FLORIDA PROFESSIONAL ENGINEER

RODOLFO J. VARGAS
PE • 35648

drawing

C-4

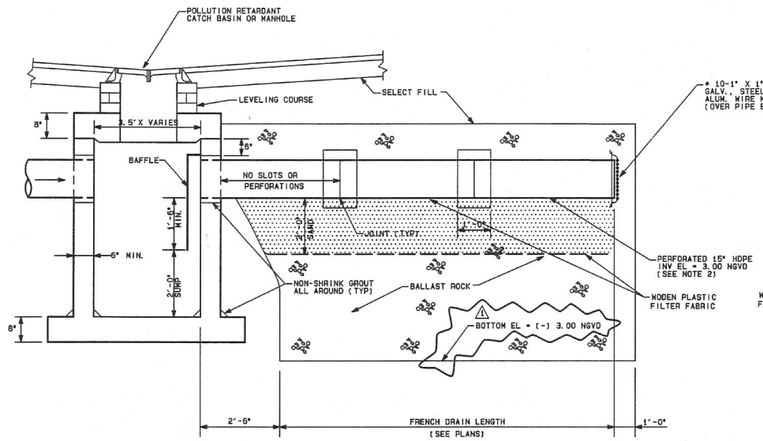


LONGITUDINAL SECTION
N. T. S.

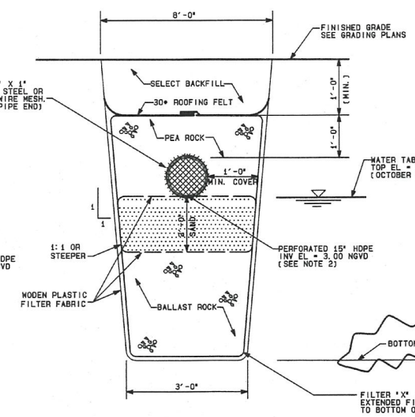


ALTERNATE CROSS-SECTION DETAIL
FOR SANDY SOIL CONDITION
N. T. S.

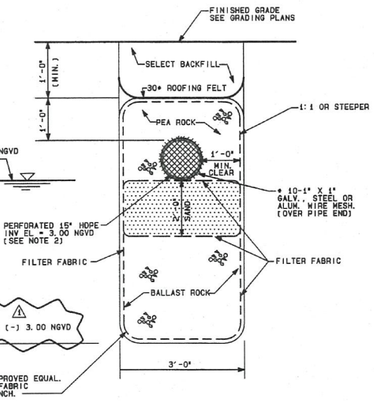


TRANSVERSE SECTION DETAIL
N. T. S.

NOTE:
1. FRENCH DRAIN TO BE IN ACCORDANCE WITH DADE COUNTY STANDARD DETAILS SD-1.1 LATEST REVISION MARCH 12, 1992.
2. WOVEN PLASTIC FILTER FABRIC (AT EACH SIDE, TOP AND BOTTOM) SHALL BE USED IN SANDY OR FILLED AREAS.
3. WASH DOWN THE BALLAST ROCK WITH CLEAN WATER AFTER ROCK HAS BEEN PLACED TO THE PROPER ELEVATION TO ALLOW FOR INITIAL SETTLEMENT THAT MAY OCCUR. ADD ADDITIONAL BALLAST ROCK TO RESTORE ROCK TO THE PROPER ELEVATION IN ACCORDANCE WITH THE DETAILS.
4. FOR PERFORATED CMP PIPE JOINT ARE TO BE BANDED, BUT NOT GASKETED.
5. FOR BAFFLE DETAILS SEE THIS SHEET

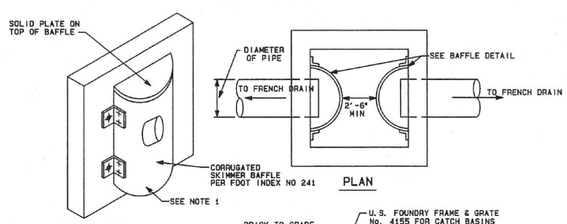


BAFFLE DETAIL




PLAN

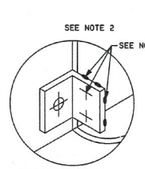


BRACKET DETAIL

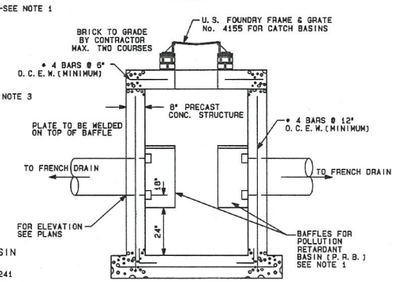


NOTES FOR P. R. CATCH BASIN
1) SKIMMER FOR FRENCH DRAIN OUTLETS PER FDOT INDEX NO 241
2) 1/2" GALVANIZED LAG BOLT IN LEAD SHIELD (TYP.)
3) WELD OR 2-1/2" THRU BOLTS (S.S.).
4) GRATING SHALL BE OFFSET IF STRUCTURE IS USED AS OVERFLOW.
5) MINIMUM SIZE OF CATCH BASIN PER SD 2.6 OR LARGER ONE BAFFLE (42"X42"), TWO BAFFLES (54"X54") SQUARE

POLLUTION RETARDANT CATCH BASING DETAIL
N. T. S.

## DRAINAGE NOTES:

1. These plans have been prepared with the best information available to the Engineer. Contractor must verify all existing underground utilities prior to beginning of construction. If any discrepancies are encountered to the extent that a "field revision" is required, Engineer must be notified immediately.
2. It is the responsibility of the Contractor to protect all existing improvements during construction. If any damage occurs as a result of the construction activities, Contractor shall restore such improvements to identical line, grade, esthetical and structural conditions as they were prior to beginning of construction.
3. All elevations refer to National Geodetic Vertical Datum (N. G. V. D.), 1929.
4. Dade County Flood Criteria for this project is 5.00 ( N. G. V. D.)
5. October High Water Elevation is 3.00 (N. G. V. D.).
6. All proposed elevations are to edge of pavement or driveway center line.
7. All French Drain perforated pipe shall be 15" diameter and shall have a minimum invert elevation of 3.00 ( N. G. V. D.). (Unless otherwise noted).
8. French Drain bottom elevation shall be (-) 3.00 (N. G. V. D.).
9. The following items shall be constructed in accordance with the referenced details from the Dade County Public Works Manual:
   a. French Drain.....S. D. 1. 1
   b. Catch Basin.....S. D. 2. 6
   c. Catch Basin Frame and Grate.....S. D. 2. 3
   d. 2' Valley Gutter.....R. 14. 6
   e. P-6 Inlet.....SD 3. 4
   f. Swale Inlet.....SD 3. 1
10. Contractor must observe extreme care to prevent debris, silts and fines from entering French Drain. Inlet Grates shall remain covered with filter fabric during construction until the system is ready to enter in operation.
11. Contractor to verify soil conditions at site. If muck is encountered, contractor shall desuck area and fill to grade with minimum 98% density.
12. All areas not paved must be sodded.
13. All work to be done in accordance with City of Miami and Miami-Dade County Public Works Standard Details and Specifications.
14. All topographic and survey information is based on Sketches of Survey prepared by Avino & Associates Land Surveyor.
15. Pipe requirements:
    French drain pipes shall be ADS Corrugated Polyethylene (Perforated). All other pipes shall be ADS N-12 Polyethylene Non-Perforated. (or approved equal).
16. Contractor shall provide a Paving and Drainage "AS-BUILT PLAN" certified by a Professional Registered Land Surveyor in the State of Florida reflecting all the features of the Stormwater System and should include, existin pavement and swale area grades, catch basin rim and invert elevations, french drain length and bottom elevation, etc.
17. a. Drainage Trenches to be ZURN Z-886 6" and ZURN Z-882 12" Perma-Trench as per ZURN FLO-DRAIN COMPANY (813) 754-7148 or approved equal.
    b. Trench Drains shall be capable of conveying a minimum flow of 1,709 gpm at the last down stream section.
    c. Contractor shall submit Shop Drawings and documentation for review and approval prior to ordering and shall strictly follow manufacture's Specifications and Installation Instructions.
    d. Contractor to Install Class E Grates Type Z-882-HDP, heel proof, capable of supporting H-20 loading.

RODOLFO J. VARGAS
LICENSE
No. 35648
STATE OF FLORIDA
PROFESSIONAL ENGINEER
10/25/13

STORM DRAINAGE DETAILS


VSNE engineering inc
CERTIFICATE OF AUTH #5529
• CIVIL
• LAND DEVELOPMENT
• TRAFFIC AND TRANSPORTATION
8550 W. FLAGLER ST. SUITE 113, MIAMI, FLORIDA 33144
TEL. (305)551-6267 FAX (305)551-4542
e-mail: vsn@vsneng.com


MERRICK PARK HOTEL
AT
123 AURORA STREET
CITY OF CORAL GABLES, FLORIDA

| no | date | revision/issue |
|---|---|---|
| 1 | 4/25/18 | REVISED FRENCH DRAIN BOTTOM ELEVATION |

| | |
|---|---|
| designed | L. SERRATE |
| drawn | N. SERRATE |
| checked | L. SERRATE |
| approved | R. VARGAS |
| proj no | 16016-01 |
| scale | AS SHOWN |
| date | NOV 18, 2016 |
| cad ref | 16016-15 |

RODOLFO J. VARGAS
PE • 35648

drawing
C-5

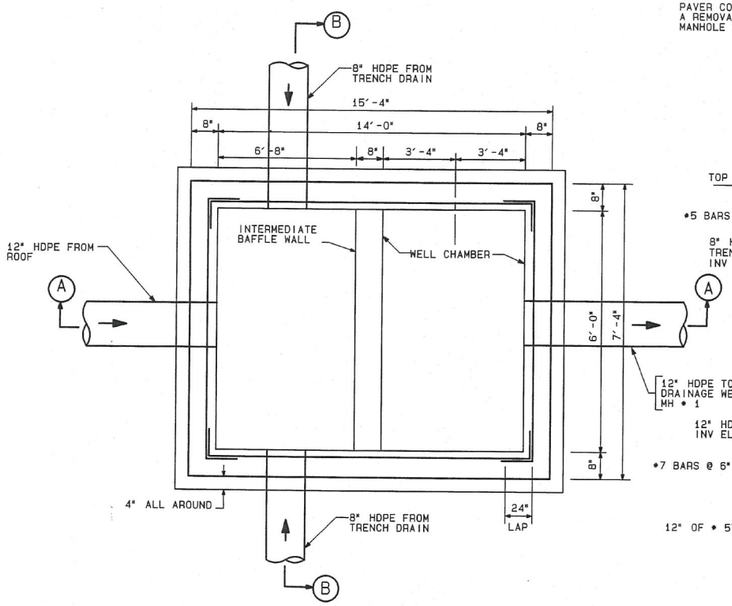


PLAN VIEW
N. T. S.

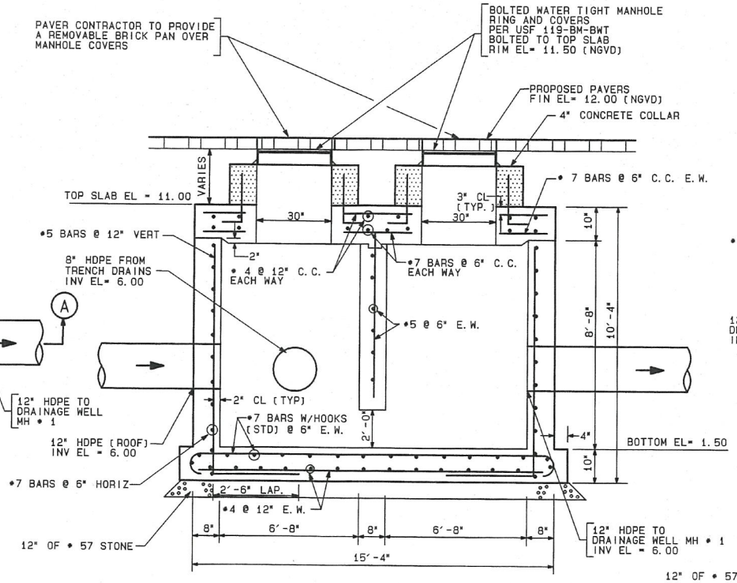


SECTION A-A
N. T. S.

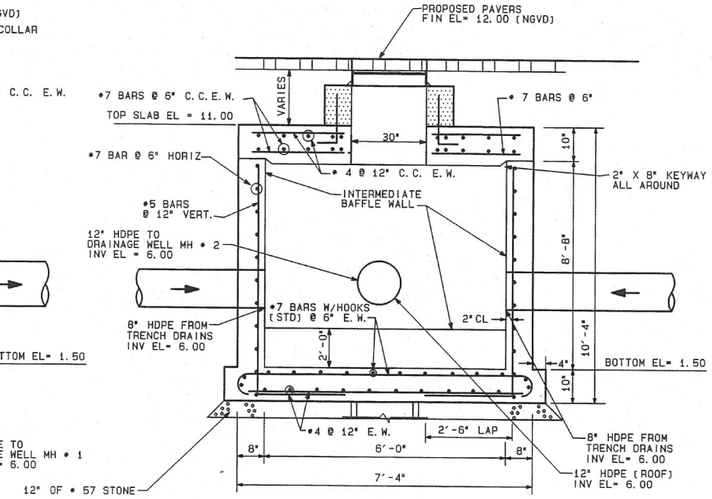


SECTION B-B
N. T. S.

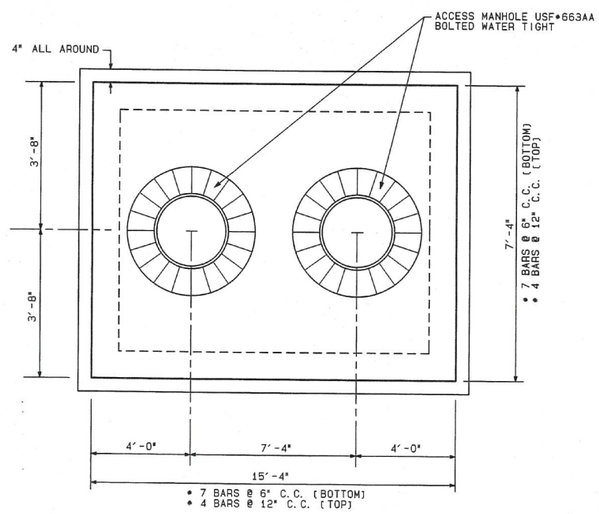


TOP SLAB REINFORCING DETAIL
N. T. S.

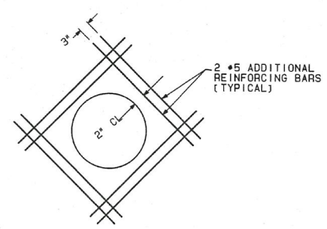


TYPICAL OPENING REINFORCING DETAIL
N. T. S.


engineering inc
CERTIFICATE OF AUTHORIZATION NO. 5629
VSNE
• CIVIL
• LAND DEVELOPMENT
• TRAFFIC AND TRANSPORTATION
8550 W. FLAGLER ST. SUITE 113, MIAMI, FLORIDA 33144
TEL. (305)551-6267 FAX (305)551-4542
e-mail: vsn@vsneng.com


# MERRICK PARK HOTEL
AT
123 AURORA STREET
CITY OF CORAL GABLES, FLORIDA

| no | date | revision/issue |
|---|---|---|
| | | |

| | |
|---|---|
| designed | R. VARGAS |
| drawn | N. SERRATE |
| checked | L. SERRATE |
| approved | R. VARGAS |
| proj no | 16016-01 |
| scale | AS SHOWN |
| date | NOV 18, 2016 |
| cad ref | 16016-19 |

RODOLFO J. VARGAS
LICENSE No 35648
STATE OF FLORIDA
PROFESSIONAL ENGINEER
11/25/18

RODOLFO J. VARGAS
PE # 35648

drawing
C-6

SEDIMENT TANK NO 1 DETAILS

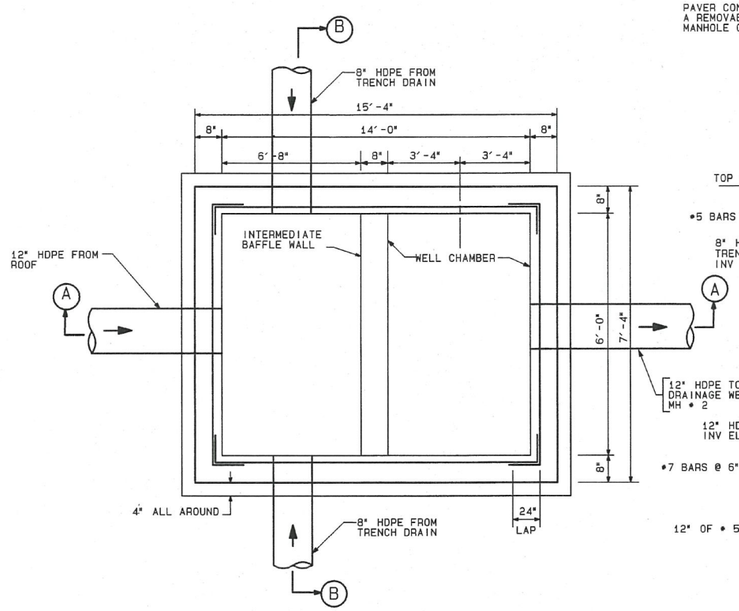


PLAN VIEW
N. T. S.

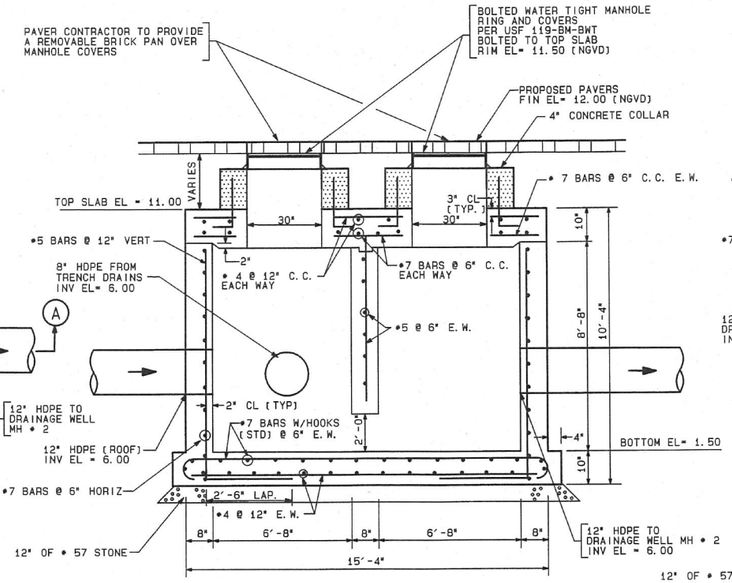


SECTION A-A
N. T. S.

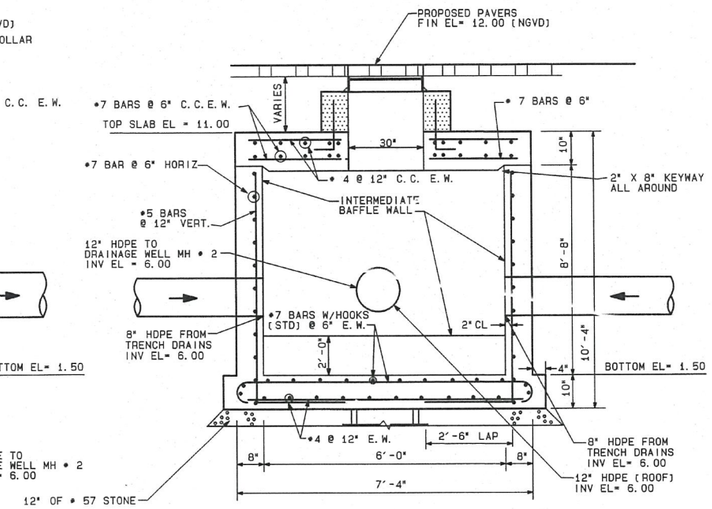


SECTION B-B
N. T. S.

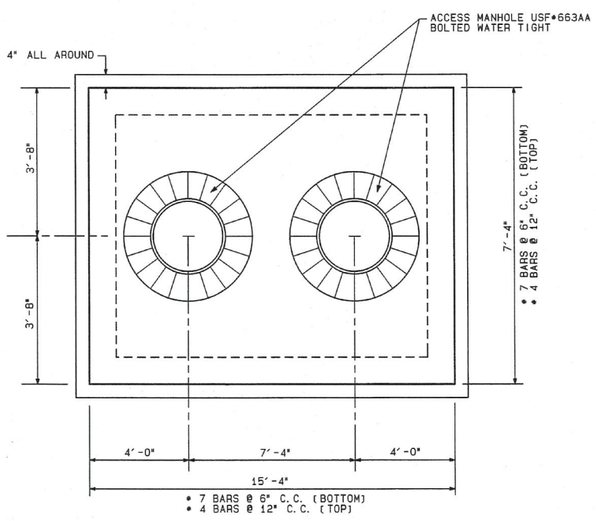


TOP SLAB REINFORCING DETAIL
N. T. S.

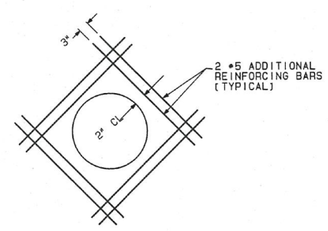


TYPICAL OPENING REINFORCING DETAIL
N. T. S.

SEDIMENT TANK NO 2 DETAILS


engineering
CERTIFICATE OF AUTHORIZATION NO. 8629
VSN
• CIVIL
• LAND DEVELOPMENT
• TRAFFIC AND TRANSPORTATION
8550 W. FLAGLER ST. SUITE 113, MIAMI, FLORIDA 33144
TEL. (305)551-6267 FAX (305)551-4542
e-mail: vsn@vsneng.com


MERRICK PARK HOTEL
AT
123 AURORA STREET
CITY OF CORAL GABLES, FLORIDA

| no | date | revision/issue |
|---|---|---|
| | | |

| | |
|---|---|
| designed | R. VARGAS |
| drawn | N. SERRATE |
| checked | L. SERRATE |
| approved | R. VARGAS |
| proj no | 16016-01 |
| scale | AS SHOWN |
| date | NOV 18, 2016 |
| cad ref | 16016-19 |

RODOLFO J. VARGAS
PE • 35648

drawing
C-7

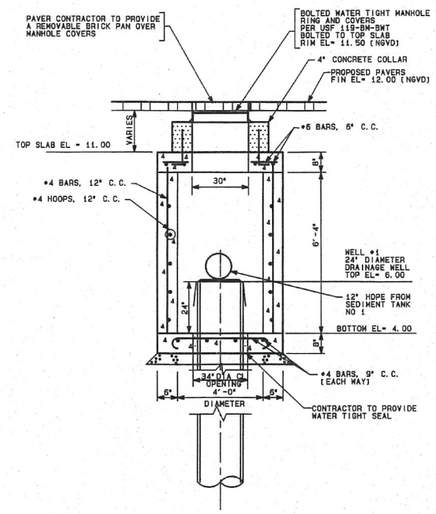


DRAINAGE WELL MANHOLE # 1

N.T.S.

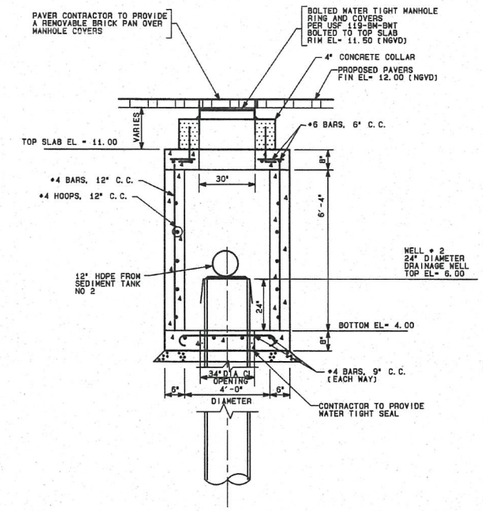


DRAINAGE WELL MANHOLE # 2

N.T.S.

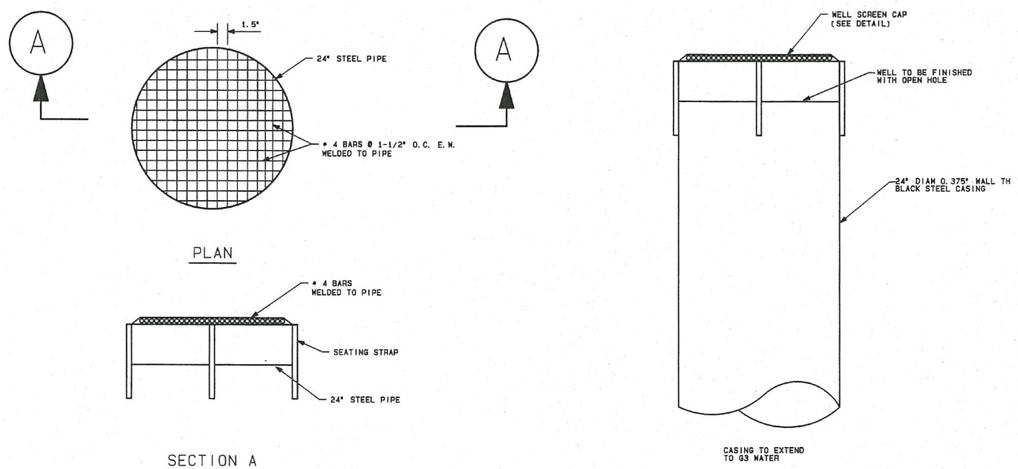


WELL SCREEN DETAIL

N.T.S.

**NOTE:**

1. CLASS I CONCRETE TO HAVE A MINIMUM COMPRESSIVE STRENGTH OF 4,000 PSI. NO CLORIDES ARE PERMITTED IN CONCRETE.
2. STEEL TO BE NEW BARS IN ACCORDANCE WITH ASTM A-615, GRADE 60.
3. NO INFLUENT PIPES SHALL BE CONNECTED TO WELL CHAMBER.
4. PROVIDE SHOP DRAWINGS OF SEDIMENT TANK FOR APPROVAL BEFORE FABRICATION. THIS SHALL INCLUDE MANHOLE FRAME AND COVER.
5. PRECAST OPTION IS ACCEPTABLE. CONTRACTOR MUST SUBMIT SHOP DRAWINGS SIGNED AND SEALED BY A STRUCTURAL ENGINEER TO PROJECT MANAGER FOR APPROVAL BY ENGINEER.
6. SEDIMENT TANK SHALL BE DESIGNED TO WITHSTAND H-20 LOADING.
7. CONTRACTOR SHALL PROVIDE DOCUMENTATION FROM THE WELL DRILLER INSURING THAT THE DISPOSAL WELL ATTAINED A MINIMUM DISCHARGE CAPACITY OF 2,000 GPM AT 4.00 FEET OF HEAD (MINIMUM). IF THESE WELL DISCHARGE CAPACITIES ARE NOT OBTAINED, THE ENGINEER MUST BE NOTIFIED IMMEDIATELY.
8. CONTRACTOR SHALL MAINTAIN SEDIMENT TANK CLEAN OF ANY DEBRIS' FOR THE LENGHT OF THE PROJECT. ENGINEER SHALL BE NOTIFIED FOR FINAL INSPECTION OF THE SEDIMENT TANK AND DRAINAGE WELL PRIOR TO ACCEPTANCE.
9. PROPOSED DRAINAGE WELL ARE NOT INTENDED TO BE USED FOR DEWATERING OPERATIONS DURING CONSTRUCTIONS.

RODOLFO J. VARGAS
LICENSE
No. 35648
STATE OF
FLORIDA
PROFESSIONAL ENGINEER

5/26/18

# DRAINAGE WELLS AND MANHOLE NO 1 AND 2 DETAILS


VSI engineering inc
CERTIFICATE OF AUTH #5529
• CIVIL
• LAND DEVELOPMENT
• TRAFFIC AND TRANSPORTATION
8550 W. FLAGLER ST. SUITE 113, MIAMI, FLORIDA 33144
TEL. (305)551-6267 FAX (305)551-4542
e-mail: vsi@vsieng.com


MERRICK PARK HOTEL
AT
123 AURORA STREET
CITY OF CORAL GABLES, FLORIDA

| no | date | revision/issue |
|---|---|---|
| 1 | 7/20/17 | REVISED PER DERM COMMENTS |

| | |
|---|---|
| designed | L. SERRATE |
| drawn | N. SERRATE |
| checked | L. SERRATE |
| approved | R. VARGAS |
| proj no | 16016-01 |
| scale | AS SHOWN |
| date | NOV 18, 2016 |
| cad ref | 16016-21 |

RODOLFO J. VARGAS
PE # 35648

drawing

C-8

OWNER:

HHLP CORAL GABLES ASSOCIATES, LLC

510 WALNUT STREET
9TH FLOOR
PHILADELPHIA, PA 19106

# MERRICK PARK HOTEL

# AT

# 4241 AURORA STREET

## CITY OF CORAL GABLES, FLORIDA

## WATER DISTRIBUTION SYSTEM

ENGINEERS:

V. S. N. ENGINEERING, INC.
CIVIL ENGINEERS

8550 W. FLAGLER STREET, SUITE 113
MIAMI, FLORIDA 33144
TEL (305) 551-6267
FAX (305) 551-4542

## LIST OF DRAWINGS:

C-6 WATER DISTRIBUTION SYSTEM COVER SHEET
C-7 SITE UTILITIES PLAN
C-8 WATER PROFILES

1. ALL MATERIALS AND LABOR UNDER THIS PROJECT SHALL BE IN STRICT ACCORDANCE WITH THE REQUIREMENTS OF THE MIAMI-DADE WATER AND SEWER DEPARTMENT AND SHALL CONFORM TO THE STANDARDS AND SPECIFICATIONS AVAILABLE AND ON FILE WITH THE DEPARTMENT. SUBMIT SHOP DRAWINGS FOR ALL MATERIALS.
2. COVER OVER WATER OR SEWER FORCE MAINS SHALL BE 4'-0" MIN.
3. ALL MAIN LINE VALVES SHALL BE INSTALLED COMPLETE WITH 10" RISER PIPES AND NO. 3 OR 53 VALVE BOXES FIRE HYDRANTS AND SERVICE VALVES SHALL BE INSTALLED COMPLETE WITH 6" RISER PIPES AND NO. 2 VALVE BOXES.
4. ALL FORCE MAIN SERVICE CONNECTIONS INTO PRESSURE TRANSMISSION MAINS SHALL HAVE A SHUT OFF VALVE AND CHECK VALVE AT THE POINT OF ENTRY.
5. ALL GRAVITY SYSTEMS SHALL BE CONSTRUCTED IN ACCORDANCE WITH DEPARTMENT STANDARDS.
6. ALL WATER METERS WILL BE INSTALLED BY THE MIAMI-DADE WATER AND SEWER DEPARTMENT, PROVIDING THE APPROPRIATE CHARGES HAVE BEEN PREPAID.
7. FIRE HYDRANT REQUIREMENTS (NUMBER AND LOCATION) SHALL BE AS REQUIRED BY MIAMI-DADE COUNTY FIRE DEPARTMENT OR THE APPROPRIATE FIRE AGENCY WITH INSTALLATION IN ACCORDANCE WITH DEPARTMENT STANDARDS.
8. CONTRACTOR MUST CALL MDWASD INSPECTION DIVISION TO ARRANGE FOR A PRECONSTRUCTION MEETING 2 FULL BUSINESS DAYS PRIOR TO PROPOSED START OF CONSTRUCTION. CONTACT ONE CALL CENTER 48 HRS PRIOR TO EXCAVATION.
9. CONTRACT INSPECTOR WILL INSPECT ANY FACILITIES APPROVED BY THE DEPARTMENT. ALL OTHER REQUIREMENTS OF THE PERMITTING AGENCY SHALL BE IN ACCORDANCE WITH THEIR STANDARDS AND REQUIREMENTS.
10. WORK PERFORMED UNDER THIS PROJECT WILL NOT BE CONSIDERED AS COMPLETE UNTIL FINAL ACCEPTANCE OF THE SYSTEM BY THE DEPARTMENT AND UNTIL THE FOLLOWING DOCUMENTS ARE RECEIVED AND APPROVED BY THE DEPARTMENT:
   a. EASEMENTS, IF REQUIRED
   b. CONTRACTOR'S WAIVER AND RELEASE OF LIEN
   c. ABSOLUTE BILL OF SALE
   d. 1. CONTRACTOR'S LETTER OF WARRANTY (I.E., LETTER AGREEMENT)
      2. DEVELOPER'S CONTRACT BOND (I.E., CONTRACT AGREEMENT).
   e. "RECORD DRAWING" PRINTS (24"x 36") SHOWING SPECIFIC LOCATIONS, DEPTH, ETC. OF ALL WATER AND SEWER FACILITIES AS LOCATED BY A LICENSED SURVEYOR & MAPPER, ALONG WITH PRINTS OF "RECORD DRAWINGS" WHICH HAVE BEEN SIGNED AND SEALED BY A REGISTERED SURVEYOR & MAPPER. (No. OF PRINTS: 3-FOR WATER, 4-FOR GRAVITY SEWER AND 5-FOR FORCE MAIN OR PUMP STATION PROJECTS). Submittal of final CAD Files required.
   f. W.R.S. LETTER OF RELEASE REQUIRED FOR ALL WATER PROJECTS
   g. BILL OF SALE SKETCH (8½"x 11") FOR WATER AND SEWER, SEPARATELY
11. ALL NEW CONNECTIONS FROM EXISTING DEPARTMENT MAINS TO BE MADE BY DEPARTMENT FORCES ONLY. THE CONTRACTOR TO EXCAVATE AT REQUIRED LOCATIONS, PROVIDE AND INSTALL MATERIAL WITH FITTINGS, PRIOR TO TAP.
12. AN APPROVED PAVING AND DRAINAGE PLAN MUST BE SUBMITTED TO MDWASD FOR ALL NEW SUBDIVISIONS PRIOR TO APPROVAL OF WATER AND SEWER PERMIT PLANS, UPON REQUEST.
13. UNLESS OTHERWISE SPECIFIED, ALL TAPS 20 INCHES AND SMALLER FOR CONNECTIONS TO EXISTING MAINS WILL BE DONE BY DEPARTMENT FORCES. UNDER NO CIRCUMSTANCES WILL THE CONTRACTOR BE PERMITTED TO TAP EXISTING MAINS IN THE SIZE RANGE SPECIFIED ABOVE. THE TAPPING SLEEVE AND TAPPING VALVE ARE FURNISHED AND INSTALLED BY THE CONTRACTOR UNDER THE SUPERVISION OF THE INSPECTOR.

| ISSUE DATE | APPROVED BY | STANDARD DETAIL | ITEM / CROSS REF. / SPEC. REF. |
|---|---|---|---|
| 03/01/2010 | V.F.C. | STANDARD REQUIREMENTS WATER AND SEWER CONSTRUCTION | GS 0.5 SHEET 1 OF 2 |
| 07/20/2016 | D.V. | | |

MIAMI-DADE WATER & SEWER DEPARTMENT

1. AT THE COMPLETION OF ANY WATER AND SEWER JOB EITHER DONATION OR CONTRACT, THE CONTRACTOR SHALL SUBMIT:
   a. RECORD DRAWING PRINTS WHICH HAVE BEEN SIGNED AND SEALED BY A FLORIDA LICENSED PROFESSIONAL SURVEYOR AND MAPPER (QTY. OF PRINTS AS REQUIRED BY THE DEPARTMENT).
2. "RECORD DRAWING" FORMAT:
   a. 24"x 36" PRINTS
   b. PDF FILE
   c. CADD FILE (DWG OR DXF) ROTATED AND TRANSLATED TO STATE PLANE COORDINATES NAD 83 FLORIDA EAST ZONE
   d. THE WORDS "RECORD DRAWING" IN LARGE LETTERS
   e. TITLE BLOCK WITH DEPARTMENT DS, DW OR ER NUMBER AND PERTINENT INFORMATION
   f. PREFERRED SCALE TO BE 1"= 40' HORIZONTALLY AND 1"= 4' VERTICALLY*
   g. STREET NOMENCLATURE
   h. SEPARATE RECORD DRAWINGS FOR WATER AND SEWER
   i. SEPARATE WATER AND SEWER PROFILE
   j. STATIONING STARTING WITH 0+00 AT PERMANENT REFERENCE POINT (I.E. ℄, ℄, ETC.) OR AS SHOWN ON DESIGN PERMIT PLANS, AND TO RUN CONTINUOUSLY TO END OF MAIN
   k. EASEMENTS, IF ANY, TIED TO PERMANENT REFERENCE POINT
   l. IDENTIFY ALL CONTROL LINES (I.E. BLDG. LINE, PROPERTY LINE, R/W, ETC.)
   m. ALL "PROPOSED" INFORMATION TO BE REMOVED FROM PRINTS, LEAVING ONLY RECORD DRAWING INFORMATION REFLECTED IN DRAWINGS
3. WATER "RECORD DRAWINGS" MUST INCLUDE:
   a. PLANS SHOWING PIPE SIZE, MATERIAL AND OFFSET OF MAIN, DEFLECTIONS (IF ANY), STATION OF SERVICES, HYDRANTS, VALVES, FITTINGS, IF ANY, ALL IN STATE PLANE COORDINATES. UTILITY CROSSINGS SHALL BE CLEARLY IDENTIFIED AND LOCATED.
   b. PROFILE SHOWING TOP OF GROUND AND TOP OF PIPE ELEVATIONS AT EVERY 100' STATION AND AT ANY CHANGE IN GRADE (WITH CORRESPONDING STATION), PIPE SIZE AND PIPE MATERIALS REFERENCED TO PLAN.
4. SEWER "RECORD DRAWINGS" MUST INCLUDE:
   a. PLAN SHOWING MANHOLE NUMBER, PIPE SIZE AND PIPE MATERIAL OF PIPE, DEFLECTION, SLOPE OF GRAVITY SEWER, LOCATION OF LATERALS WITH REFERENCE TO MANHOLE AND CLEANOUTS.
   b. THE NORTHERLY AND EASTERLY COORDINATES ON ALL FIELD OBTAINED MEASUREMENTS AND PROVIDED ON ALL RECORD DRAWING SUBMITTALS
   c. PROFILE SHOWING MANHOLE NUMBER (AS PER PLAN), RIM AND INVERT ELEVATIONS (IF MORE THAN ONE INVERT, LABEL NORTH, SOUTH, ETC.), AND STATION STARTING AT 0+00 AT DOWNSTREAM MANHOLE.
5. FORCE MAIN "RECORD DRAWING" SAME AS WATER MAIN.
6. EACH RECORD DRAWING SHALL SHOW THE FLORIDA STATE PLANE COORDINATES (CURRENT READJUSTMENT) OF ALL THE MANHOLES AND VALVES AND OF AT LEAST TWO HORIZONTAL CONTROL POINTS PROPERLY IDENTIFIED AND LOCATED WITHIN THE PROJECT.

* OTHER SCALE MAY BE PERMITTED, BUT MUST BE APPROVED BY THE DEPARTMENT PRIOR TO PREPARATION OF DRAWINGS.

| ISSUE DATE | APPROVED BY | STANDARD DETAIL | ITEM / CROSS REF. / SPEC. REF. |
|---|---|---|---|
| 03/11/2009 | V.F.C. | "RECORD DRAWING" REQUIREMENTS | GS 0.5 SHEET 2 OF 2 |
| 07/20/2016 | D.V. | | |

MIAMI-DADE WATER & SEWER DEPARTMENT

Sunshine 811

Call 811 or www.sunshine811.com two full business days before digging to have utilities located and marked.

*Check positive response codes before you dig!*

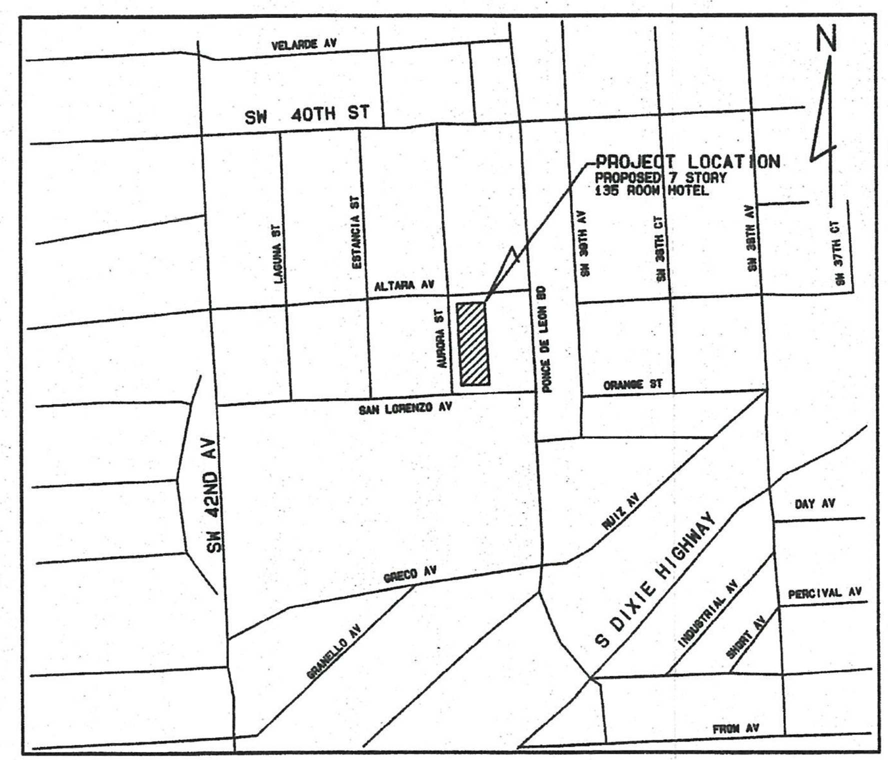


## LOCATION SKETCH

SCALE: 1" = 300'

FOLIO NO. 03-4120-017-1410
SEC 20, TWP 54 S, RGE 41 E

## LEGAL DESCRIPTION

**Lots 12, 13, 14, 15, 16, 17, 18, 19, 20, 21, and 22, in Block 6, of REVISED PLAT OF CORAL GABLES INDUSTRIAL SECTION, according to the Plat thereof, as recorded in Plat Book 28, at Page 22, of the Public Records of Miami-Dade County, Florida, together with all the right, title and interest of the Grantor in and to all adjoining streets, alleys, and rights of way, whether vacated or not.**

**NOTE:**
**PROJECT IS LOCATED IN SALT WATER INTRUSION AREA.**
**ALL PROP D. I. P. PIPE AND FITTINGS TO BE ZINC COATED AND POLYETHYLENE ENCASED PER M-DWASD DETAIL A 9.0.**

## GENERAL NOTES:

(NOT PART OF M-DWASAD NOTES NOR APPROVAL

1. THESE PLANS HAVE BEEN PREPARED WITH THE BEST INFORMATION AVAILABLE TO THE ENGINEER. CONTRACTOR MUST VERIFY ALL EXISTING UNDERGROUND UTILITIES PRIOR TO BEGINNING OF CONSTRUCTION. IF ANY DISCREPANCIES ARE ENCOUNTERED TO THE EXTENT THAT A "FIELD REVISION" IS REQUIRED ENGINEER MUST BE NOTIFIED IMMEDIATELY.
2. IT IS THE RESPONSIBILITY OF THE CONTRACTOR TO PROTECT ALL EXISTING IMPROVEMENTS DURING CONSTRUCTION. IF ANY DAMAGE OCCURS AS A RESULT OF THE CONSTRUCTION ACTIVITIES CONTRACTOR SHALL RESTORE SUCH IMPROVEMENTS TO IDENTICAL LINE, GRADE, ESTHETICAL AND STRUCTURAL CONDITIONS AS THEY WERE PRIOR TO BEGINNING OF CONSTRUCTION.
3. CONTRACTOR SHALL COORDINATE ALL MAINTENANCE OF TRAFFIC DURING CONSTRUCTION WITH CITY OF CORAL GABLES PUBLIC WORKS DEPARTMENT AND SHALL MEET ALL THE REQUIREMENTS OF THE STATE OF FLORIDA'S "MANUAL ON TRAFFIC CONTROL AND SAFE PRACTICES FOR STREET AND HIGHWAY CONSTRUCTIONS".
4. CONTRACTOR IS RESPONSIBLE TO FURNISH ALL NECESSARY SIGNS, PAVEMENT MARKINGS, BARRICADES AND TEMPORARY PAVEMENT (IF NECESSARY) AS REQUIRED TO PROPERLY MAINTAIN TRAFFIC DURING CONSTRUCTION.
5. ALL ELEVATIONS REFER TO N.G.V.D. 1929 DATUM.
6. ALL SURVEY AND TOPOGRAPHICAL INFORMATION BASED ON SURVEY PREPARED BY AVINO & ASSOCIATES, INC. LAND SURVEYORS.
7. ALL ROADWAY WORK TO BE DONE IN ACCORDANCE WITH FLORIDA DEPARTMENT OF TRANSPORTATION AND CITY OF CORAL GABLES STANDARD DETAILS, SPECIFICATIONS AND REQUIREMENTS.
8. SITE CONTRACTOR AND PLUMBING CONTRACTOR SHALL COORDINATE FOR EXACT LOCATION AND ELEVATION OF WATER AND SEWER SERVICES ENTERING THE BUILDING PRIOR TO CONSTRUCTION. FOR LOCATION OF SERVICES RELATIVE TO THE BUILDING SEE PLUMBING DRAWINGS. PLUMBING SUB-CONTRACTOR SHALL SUBMIT A SHOP DRAWING REFLECTING THE CONNECTION OF THE SANITARY LINES TO THE PROPOSED SITE SEWER SYSTEM FOR REVIEW AND APPROVAL BY CIVIL ENGINEER PRIOR TO ANY INSTALLATION. PLUMBING CONTRACTOR AND GENERAL CONTRACTOR SHALL RESOLVE ALL INTERNAL SEWER AND STRUCTURAL CONFLICTS AND SHOULD BE REFLECTED IN THIS SHOP DRAWING PRIOR TO ANY BUILDING SEWER BEING INSTALLED. GENERAL CONTRACTOR AND PLUMBING SUB-CONTRACTOR ASSUME ANY AND ALL RESPONSIBILITY FOR THE CONNECTION TO THE PROPOSED SITE SEWER SYSTEM IF THIS PROCEDURE IS NOT IMPLEMENTED.

## RER-DERM WATER-SEWER GENERAL NOTES

(NOT A PART OF M-DWASD NOTES NOR APPROVALS)

1. A horizontal distance of at least 6 feet, and preferably 10 feet (outside to outside), shall be maintained between gravity or pressure sewer pipes and water pipes. The minimum horizontal separation can be reduced to 3 feet for vacuum-type sewers or for gravity sewers where the top of the sewer pipe is at least 6 inches below the bottom of the water pipe. When the above specified horizontal distance criteria cannot be met due to an existing underground facility conflict, smaller separations are allowed if one of the following is met:
   a) The sewer pipes are designed and constructed equal to the water pipe and pressure tested at 150 psi.
   b) The sewer is encased in a watertight carrier pipe or concrete.
   c) The top of the sewer is at least 18 inches below the bottom of the water pipe.
2. A vertical distance of at least 12 inches (outside to outside) shall be maintained between any water and sewer mains with sewer pipes preferably crossing under water mains. The minimum vertical separation can be reduced to 6 inches for vacuum-type sewers or for gravity sewers where the sewer pipe is below the water main. The crossing shall be arranged so that all water main joints are at least 6 feet from all joints in gravity and pressure sewer pipes. This distance can be reduced to 3 feet for vacuum-type sewers. When the above specified vertical distance criteria cannot be met due to an existing underground facility conflict, smaller separations are allowed if one of the following is met:
   a) The sewer pipes are designed and constructed equal to the water pipe and pressure tested at 150 psi.
   b) The sewer is encased in a watertight carrier pipe or concrete.
3. Air release valves shall be provided at high points of new force main sanitary sewers.
4. Gravity sanitary sewers constructed within a public wellfield protection area shall be C-900 PVC or Ductile Iron Pipe. The maximum allowable exfiltration rate of gravity sanitary sewers constructed in a public wellfield protection area shall be:
   a) Residential Land Uses. Fifty (50) gallons per inch pipe diameter per mile per day, based on a minimum two (2) hour test having a minimum of two (2) feet of positive head above the crown of the pipe.
   b) Non-Residential Land Uses. Twenty (20) gallons per inch pipe diameter per mile per day, based on a minimum two (2) hour test having a minimum of two (2) feet of positive head above the crown of the pipe.
   c) Any observed leaks or any obviously defective joints or pipes shall be replaced even when the total leakage is below that allowed.
5. The maximum allowable exfiltration rate of gravity sanitary sewers constructed outside a public wellfield protection area shall be one hundred (100) gallons per inch pipe diameter per mile per day, based on a minimum two (2) hour test having a minimum of two (2) feet of positive head above the crown of the pipe. Any observed leaks or any obviously defective joints or pipes shall be replaced even when the total leakage is below that allowed.
6. Forcemain sanitary sewers constructed within a public wellfield protection area shall be ductile iron, C-900 PVC, HDPE or reinforced concrete pressure sewer pipes.
7. The maximum allowable exfiltration/leakage rate of forcemain sanitary sewers shall be:
   a) Ductile Iron, C-900 PVC, HDPE and PVC Pipe. The allowable leakage rate specified in American Water Works Association Standard (AWWAS) C600-82 at a test pressure of 100 psi for a duration of not less than two (2) hours.
   b) Reinforced Concrete Pressure Pipe. Half (1/2) the allowable leakage rate specified in AWWA C600-82 at a test pressure of 100 psi for a duration of not less than two (2) hours.
   c) Any observed leaks or any obviously defective joints or pipes shall be replaced even when the total leakage is below that allowed.
8. The contractor shall verify nature, depth, and character of existing underground utilities prior to start of construction.
9. In no case shall a contractor install utility pipes, conduits, cables, etc. in the same trench above an existing water or sewer pipe except where they cross.
10. If any area of the work site is found to contain buried solid waste and/or ground or ground water contamination, the following shall apply:
   a) All work in the area shall follow all applicable safety requirements (e.g., OSHA, etc.) and notification must be provided to the appropriate agencies.
   b) Immediately notify the Environmental Monitoring and Restoration Division (EMRD). The EMRD can be contacted at (305) 372-6700.
   c) If contaminated soils and/or buried solid waste material is excavated during construction, then they require proper handling and disposal in accordance with the local, state and federal regulations. Be advised that the landfill owner/operator is the final authority on disposal and may have requirements beyond those provided by herein. If disposal within a Miami-Dade County owned landfill (Class I landfill) is appropriate and selected, please contact the Miami-Dade County Department of Solid Waste Management at (305) 594-6666 for information.
   d) The reuse of contaminated soils that are not returned to the original excavation requires prior approval of a Soil Management Plan from the Environmental Monitoring and Restoration Division. The EMRD can be contacted at (305) 372-6700.
11. Pumps must comply with the National Electrical Code (NEC) requirements for Class I, Group D, Division 1 locations (Explosion Proof).
12. The contractor is advised that a Tree Removal/Relocation Permit may be required prior to the removal and/or relocation of tree resources. Prior to removing or relocating any trees, the Contractor shall notify the Tree and Forest Resources Section of DERM at (305) 372-6574 or via e-mail at: tfrs@miamidade.gov , or contact the municipality with tree ordinance jurisdiction to obtain any required permits. Those trees not interfering with the construction shall be protected in place in accordance with the provisions of Section 24-49.5 of the Miami-Dade Code.
13. Please note that the demolition, removal, and/or disturbance of existing underground utilities that contain asbestos-cement pipes (ACP) are subject to the provisions of 40 CFR-61 Subpart M. Therefore, pursuant to the provisions of 40 CFR-61-145, a NOTICE OF DEMOLITION OR ASBESTOS RENOVATION form must be filed with the Air Quality Management Division (AQMD) of DERM, at least ten (10) working days prior to starting of any work. Note that the backfilling and burial of crushed ACP would cause those locations to be considered active disposal sites and subject to 40 CFR-61.154, and 40 CFR-61.151 a year after project completion. Existing standard operating procedures, as well as applicable federal, state and local regulatory criteria, must be followed and implemented to minimize any potential release of fugitive emissions, especially during project construction activities. The AQMD can be contacted via email at asbestos@miamidade.gov or 305-372-6925.

Rev. 4/30/2018

## M-DWASD NOTES:

1. All existing utilities being removed and/or relocated must remain active and in service, until such time when new replacing utilities have been installed, in service, accepted by the Department and all related services from the existing mains have been transferred to the new ones, by M-DWASD forces at owner's expense as applicable.
2. All Water and/or sewer facilities located in private property shall be removed after all installed services from them have been transferred to the already installed and in service new mains. Any associated exclusive easements shall be closed and released after the removal of the existing water and/or sewer service facilities.
3. Any existing public water service within the property in conflict with the proposed development must be removed after any associated easement is closed and released as applicable.

## HRS NOTES:

(NOT PART OF M-DWASAD NOTES NOR APPROVAL

HEALTH DEPARTMENT NOTES
(NOT A PART OF M-DWASD NOTES NOR APPROVAL)

WATER MAIN HORIZONTAL SEPARATIONS

[illegible]

BETWEEN WATER MAINS AND VACUUM TYPE SEWERS PREFERABLY 10 FEET AND AT LEAST 3 FEET MINIMUM.

[illegible]

10 FEET TO ANY PART OF ON-SITE SEWER TREATMENT OR DISPOSAL SYSTEM.

WATER MAIN VERTICAL SEPARATIONS

[illegible]

PRESSURE SANITARY SEWER, WASTEWATER OR STORM WATER FORCE MAIN, OR RECLAIMED WATER, AT LEAST 12 INCHES ABOVE OR BELOW.*

* NOTE: [illegible]

RODOLFO J. VARGAS LICENSE No. 35648 STATE OF FLORIDA PROFESSIONAL ENGINEER

10/25/18

RODOLFO J. VARGAS
PE # 35648

This item has been electronically signed and sealed by Rodolfo J. Vargas, PE on 07/12/2018 using a digital signature. Printed copies of this document are not considered signed and sealed and the signature must be verified on any electronic copies.

AGMT # 23408

CERTIFICATE OF AUTH # 5529
dated: November 18, 2016
cad ref: 16016-16

OWNER:


HHLP CORAL GABLES
ASSOCIATES, LLC

510 WALNUT STREET
9TH FLOOR
PHILADELPHIA, PA 19106


# MERRICK PARK HOTEL

# AT

# 123 AURORA STREET

# CITY OF CORAL GABLES, FLORIDA

## SEWER COLLECTION SYSTEM

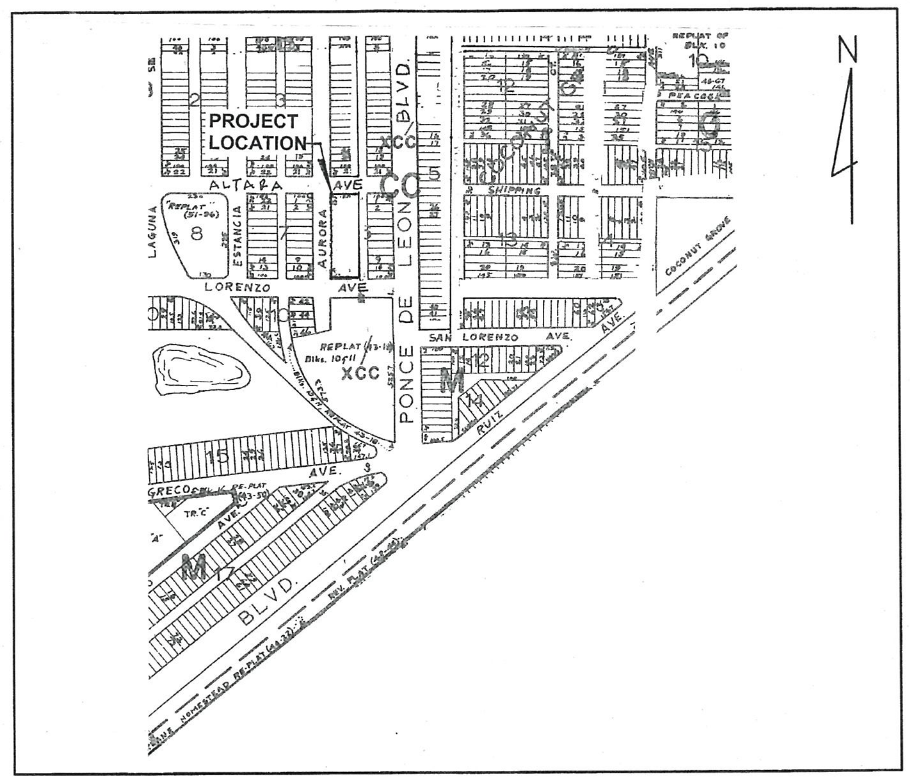


LOCATION SKETCH

SCALE: 1" = 300'

**Sunshine811**

Call 811 or www.sunshine811.com two full business days before digging to have utilities located and marked.

*Check positive response codes before you dig!*

## LEGAL DESCRIPTION

LOTS 12, 13, 14, 15, 16, 17, 18, 19, 20, 21, AND 22 IN BLOCK 6, REVISED PLAT CORAL GABLES INDUSTRIAL SECTION, ACCORDING TO THE PLAT THEREOF AS RECORDED IN PLAT BOOK 28, AT PAGE 22, OF THE PUBLIC RECORDS OF MIAMI-DADE COUNTY, FLORIDA.

## HRS NOTES:

(NOT PART OF M-DWASAD NOTES NOR APPROVAL

THE FOLLOWING ARE REQUIREMENTS
per
Department of Health

WATER MAIN HORIZONTAL SEPARATIONS

SEPARATIONS SHALL BE MEASURED OUTSIDE EDGE TO OUTSIDE EDGE BETWEEN WATER MAINS AND, STORM SEWERS, STORMWATER FORCE MAINS, OR RECLAIMED WATER LINES, SHALL BE 3 FEET MINIMUM.

BETWEEN WATER MAINS AND VACUUM TYPE SEWERS PREFERABLY 10 FEET AND AT LEAST 3 FEET MINIMUM.

GRAVITY OR PRESSURE SANITARY SEWERS, WASTEWATER FORCE MAINS OR RECLAIMED WATER PREFERABLY 10 FEET AND AT LEAST 6 FEET MAY BE REDUCED TO 3 FEET WHERE BOTTOM OF WATER MAIN IS AT LEAST 6 INCHES ABOVE TOP OF SEWER.

10 FEET TO ANY PART OF ON-SITE SEWER TREATMENT OR DISPOSAL SYSTEM.

WATER MAIN VERTICAL SEPARATIONS

SEPARATIONS BETWEEN WATER MAINS AND GRAVITY SEWER, VACUUM TYPE SEWER, OR STORM SEWERS, TO BE PREFERABLY 12 INCHES, OR AT LEAST 6 INCHES ABOVE, OR AT LEAST 12 INCHES IF BELOW.*

PRESSURE SANITARY SEWER, WASTEWATER OR STORM WATER FORCE MAIN, OR RECLAIMED WATER, AT LEAST 12 INCHES ABOVE OR BELOW.*

* NOTE: CENTER 1-FULL LENGHT OF WATER MAIN PIPE AT CROSSINGS; ALTERNATIVELY ARRANGE PIPES SO JOINTS ARE AT LEAST 3 FEET FROM JOINTS IN VACUUM, STORM OR STORM FORCE MAINS. AT LEAST 6 FEET FROM JOINTS IN GRAVITY OR PRESSURE SEWERS, WASTEWATER FORCE MAINS OR RECLAIMED WATER.


ENGINEERS:

V. S. N. ENGINEERING, INC.
CIVIL ENGINEERS

8550 W. FLAGLER STREET, SUITE 113
MIAMI, FLORIDA 33144
TEL (305) 551-6267
FAX (305) 551-4542


## LIST OF DRAWINGS:



| | |
|---|---|
| C-7 | SITE UTILITIES PLAN |
| C-9 | SEWER COLLECTION SYSTEM |
| C-10 | SEWER PROFILES |



## M-DWASD NOTES:

1. All existing utilities being removed and/or relocated must remain active and in service, until such time when new replacing utilities have been installed, in service, accepted by the Department and all related services from the existing mains have been transferred to the new ones, by City of Hialeah Gardens Water and Sewer Department forces at owner's expense as applicable.
2. All Water and/or sewer facilities located in private property shall be removed after all installed services from them have been transferred to the already installed and in service new mains. Any associated exclusive easements shall be closed and released after the removal of the existing water and/or sewer service facilities.
3. Any existing public water service within the property in conflict with the proposed development must be removed after any associated easement is closed and released as applicable.

## GENERAL NOTES:

(NOT PART OF M-DWASAD NOTES NOR APPROVAL

1. THESE PLANS HAVE BEEN PREPARED WITH THE BEST INFORMATION AVAILABLE TO THE ENGINEER. CONTRACTOR MUST VERIFY ALL EXISTING UNDERGROUND UTILITIES PRIOR TO BEGINNING OF CONSTRUCTION. IF ANY DISCREPANCIES ARE ENCOUNTERED TO THE EXTENT THAT A "FIELD REVISION" IS REQUIRED ENGINEER MUST BE NOTIFIED IMMEDIATELY.
2. IT IS THE RESPONSIBILITY OF THE CONTRACTOR TO PROTECT ALL EXISTING IMPROVEMENTS DURING CONSTRUCTION. IF ANY DAMAGE OCCOURS AS A RESULT OF THE CONSTRUCTION ACTIVITIES CONTRACTOR SHALL RESTORE SUCH IMPROVEMENTS TO IDENTICAL LINE, GRADE, ESTHETICAL AND STRUCTURAL CONDITIONS AS THEY WERE PRIOR TO BEGINNING OF CONSTRUCTION.
3. CONTRACTOR SHALL COORDINATE ALL MAINTENANCE OF TRAFFIC DURING CONSTRUCTION WITH MIAMI DADE COUNTY AVIATION DEPARTMENT AND SHALL MEET ALL THE REQUIREMENTS OF THE STATE OF FLORIDA'S "MANUAL ON TRAFFIC CONTROL AND SAFE PRACTICES FOR STREET AND HIGHWAY CONSTRUCTIONS".
4. CONTRACTOR IS RESPONSIBLE TO FURNISH ALL NECESSARY SIGNS, PAVEMENT MARKINGS, BARRICADES AND TEMPORARY PAVEMENT (IF NECESSARY) AS REQUIRED TO PROPERLY MAINTAIN TRAFFIC DURING CONSTRUCTION.
5. ALL ELEVATIONS REFER TO N.G.V.D. 1929 DATUM.
6. ALL SURVEY AND TOPOGRAPHICAL INFORMATION BASED ON SURVEY PREPARED BY AVINO & ASSOCIATES, INC. LAND SURVEYORS.
7. ALL ROADWAY WORK TO BE DONE IN ACCORDANCE WITH FLORIDA DEPARTMENT OF TRANSPORTATION AND CITY OF SUNNY ISLES STANDARD DETAILS, SPECIFICATIONS AND REQUIREMENTS.
8. SITE CONTRACTOR AND PLUMBING CONTRACTOR SHALL COORDINATE FOR EXACT LOCATION AND ELEVATION OF WATER AND SEWER SERVICES ENTERING THE BUILDING PRIOR TO CONSTRUCTION. FOR LOCATION OF SERVICES RELATIVE TO THE BUILDING SEE PLUMBING DRAWINGS. PLUMBING SUB-CONTRACTOR SHALL SUBMIT A SHOP DRAWING REFLECTING THE CONNECTION OF THE SANITARY LINES TO THE PROPOSED SITE SEWER SYSTEM FOR REVIEW AND APPROVAL BY CIVIL ENGINEER PRIOR TO ANY INSTALLATION. PLUMBING CONTRACTOR AND GENERAL CONTRACTOR SHALL RESOLVE ALL INTERNAL SEWER AND STRUCTURAL CONFLICTS AND SHOULD BE REFLECTED IN THIS SHOP DRAWING PRIOR TO ANY BUILDING SEWER BEING INSTALLED. GENERAL CONTRACTOR AND PLUMBING SUB-CONTRACTOR ASSUME ANY AND ALL RESPONSIBILITY FOR THE CONNECTION TO THE PROPOSED SITE SEWER SYSTEM IF THIS PROCEDURE IS NOT IMPLEMENTED.

MIAMI-DADE COUNTY

## RER-DERM WATER-SEWER GENERAL NOTES

1. A horizontal distance of at least 6 feet, and preferably 10 feet (outside to outside), shall be maintained between gravity or pressure sewer pipes and water pipes. The minimum horizontal separation can be reduced to 3 feet for vacuum-type sewers or for gravity sewers where the top of the sewer pipe is at least 6 inches below the bottom of the water pipe. When the above specified horizontal distance criteria cannot be met due to an existing underground facility conflict, smaller separations are allowed if one of the following is met:
   a) The sewer pipes are designed and constructed equal to the water pipe and pressure tested at 150 psi.
   b) The sewer is encased in a watertight carrier pipe or concrete.
   c) The top of the sewer is at least 18 inches below the bottom of the water pipe.
2. A vertical distance of at least 12 inches (outside to outside) shall be maintained between any water and sewer mains with sewer pipes preferably crossing under water mains. The minimum vertical separation can be reduced to 6 inches for vacuum-type sewers or for gravity sewers where the sewer pipe is below the water main. The crossing shall be arranged so that all water main joints are at least 6 feet from all joints in gravity and pressure sewer pipes. This distance can be reduced to 3 feet for vacuum-type sewers. When the above specified vertical distance criteria cannot be met due to an existing underground facility conflict, smaller separations are allowed if one of the following is met:
   a) The sewer pipes are designed and constructed equal to the water pipe and pressure tested at 150 psi.
   b) The sewer is encased in a watertight carrier pipe or concrete.
3. Air release valves shall be provided at high points of new force main sanitary sewers.
4. Gravity sanitary sewers constructed within a public wellfield protection area shall be C-900 PVC or Ductile Iron Pipe. The maximum allowable exfiltration rate of gravity sanitary sewers constructed in a public wellfield protection area shall be:
   a) Residential Land Uses. Fifty (50) gallons per inch pipe diameter per mile per day, based on a minimum two (2) hour test having a minimum of two (2) feet of positive head above the crown of the pipe.
   b) Non-Residential Land Uses. Twenty (20) gallons per inch pipe diameter per mile per day, based on a minimum two (2) hour test having a minimum of two (2) feet of positive head above the crown of the pipe.
   c) Any observed leaks or any obviously defective joints or pipes shall be replaced even when the total leakage is below that allowed.
5. The maximum allowable exfiltration rate of gravity sanitary sewers constructed outside a public wellfield protection area shall be one hundred (100) gallons per inch pipe diameter per mile per day, based on a minimum two (2) hour test having a minimum of two (2) feet of positive head above the crown of the pipe. Any observed leaks or any obviously defective joints or pipes shall be replaced even when the total leakage is below that allowed.
6. Forcemain sanitary sewers constructed within a public wellfield protection area shall be ductile iron, C-900 PVC, HDPE or reinforced concrete pressure sewer pipes.
7. The maximum allowable exfiltration/leakage rate of forcemain sanitary sewers shall be:
   a) Ductile Iron, C-900 PVC, HDPE and PVC Pipe. The allowable leakage rate specified in American Water Works Association Standard (AWWAS) C600-82 at a test pressure of 100 psi for a duration of not less than two (2) hours.
   b) Reinforced Concrete Pressure Pipe. Half (1/2) the allowable leakage rate specified in AWWA C600-82 at a test pressure of 100 psi for a duration of not less than two (2) hours.
   c) Any observed leaks or any obviously defective joints or pipes shall be replaced even when the total leakage is below that allowed.
8. The contractor shall verify nature, depth, and character of existing underground utilities prior to start of construction.
9. In no case shall a contractor install utility pipes, conduits, cables, etc. in the same trench above an existing water or sewer pipe except where they cross.
10. If any area of the work site is found to contain buried solid waste and/or ground or ground water contamination, the following shall apply:
    a) All work in the area shall follow all applicable safety requirements (e.g., OSHA, etc.) and notification must be provided to the appropriate agencies.
    b) Immediately notify the Environmental Monitoring and Restoration Division (EMRD). The EMRD can be contacted at (305) 372-6700.
    c) If contaminated soils and/or buried solid waste material is excavated during construction, then they require proper handling and disposal in accordance with the local, state and federal regulations. Be advised that the landfill owner/operator is the final authority on disposal and may have requirements beyond those provided by herein. If disposal within a Miami-Dade County owned landfill (Class I landfill) is appropriate and selected, please contact the Miami-Dade County Department of Solid Waste Management at (305) 594-6666 for information.
    d) The reuse of contaminated soils that are not returned to the original excavation requires prior approval of a Soil Management Plan from the Environmental Monitoring and Restoration Division. The EMRD can be contacted at (305) 372-6700.
11. Pumps must comply with the National Electrical Code (NEC) requirements for Class I, Group D, Division 1 locations (Explosion Proof).

Rev. 5/25/2017

RODOLFO J. VARGAS LICENSE No. 35648 STATE OF FLORIDA PROFESSIONAL ENGINEER

RODOLFO J. VARGAS
PE • 35648

CERTIFICATE OF AUTH • 5529
dated: November 18, 2016
cad ref: 16016-17

C-10

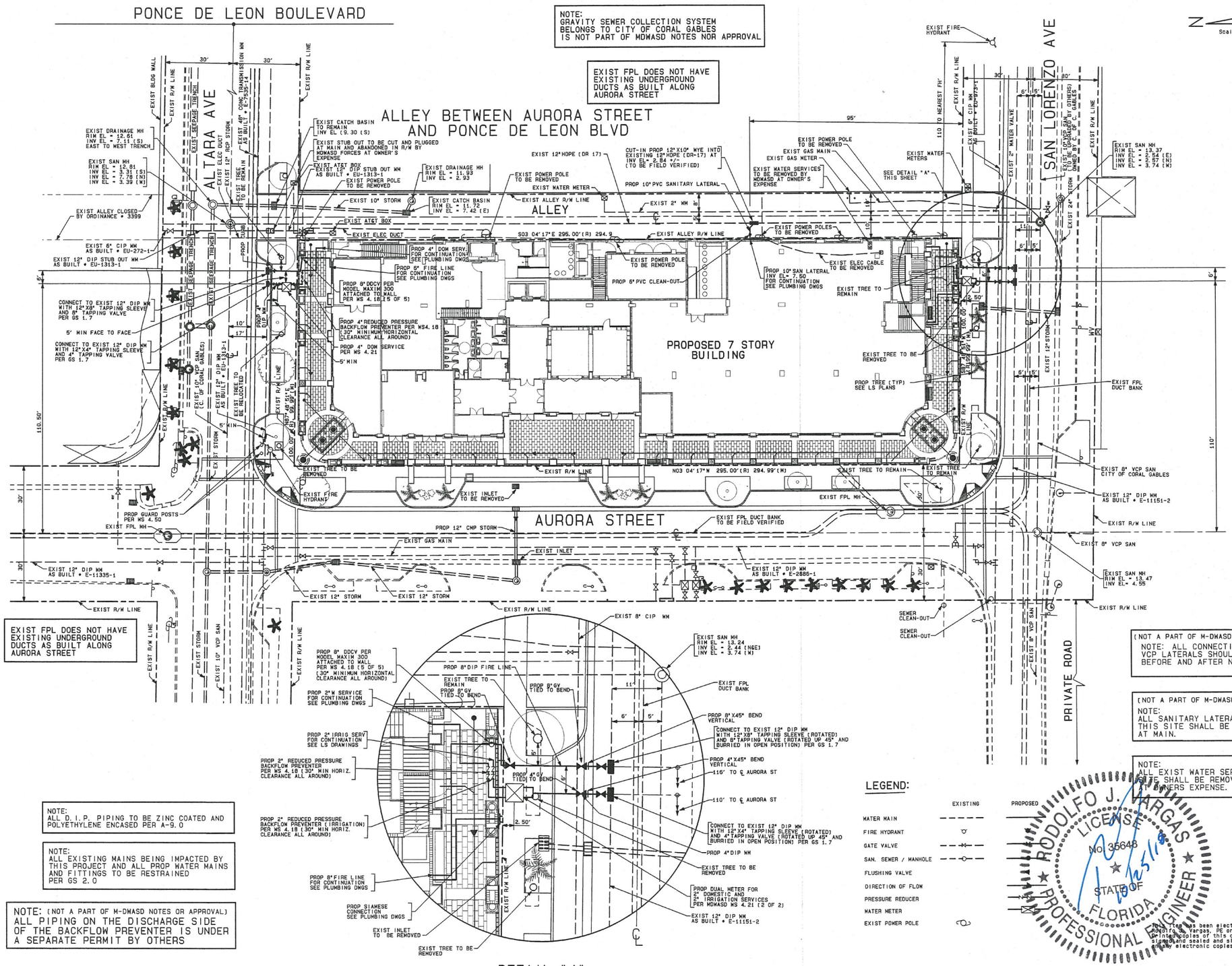


NOTE: ALL D. I. P. PIPING TO BE ZINC COATED AND POLYETHYLENE ENCASED PER A-9.0

NOTE: ALL EXISTING MAINS BEING IMPACTED BY THIS PROJECT AND ALL PROP WATER MAINS AND FITTINGS TO BE RESTRAINED PER GS 2.0

NOTE: (NOT A PART OF M-DWASD NOTES OR APPROVAL) ALL PIPING ON THE DISCHARGE SIDE OF THE BACKFLOW PREVENTER IS UNDER A SEPARATE PERMIT BY OTHERS

(NOT A PART OF M-DWASD NOTES OR APPROVAL) NOTE: ALL CONNECTIONS TO EXISTING VCP LATERALS SHOULD BE TELEVISED BEFORE AND AFTER NEW CONNECTION

(NOT A PART OF M-DWASD NOTES OR APPROVAL) NOTE: ALL SANITARY LATERALS NOT SERVING THIS SITE SHALL BE CUT AND PLUG AT MAIN.

NOTE: ALL EXIST WATER SERVICES NOT SERVING THIS SITE SHALL BE REMOVED BY MDWASD FORCES AT OWNERS EXPENSE.

AGREEMENT ID# 23408

SITE UTILITIES PLAN


engineering inc
CERTIFICATE OF AUTH #5529
• CIVIL
• LAND DEVELOPMENT
• TRAFFIC AND TRANSPORTATION
8550 W. FLAGLER ST. SUITE 113, MIAMI, FLORIDA 33144
TEL. (305)551-6267 FAX (305)551-4542
e-mail: vsnevsneng.com


# MERRICK PARK HOTEL
AT
4241 AURORA STREET
CITY OF CORAL GABLES, FLORIDA

| no | date | revision/issue |
|---|---|---|
| 1 | 5/22/18 | REVISED PER MDWASD COMMENTS |
| 2 | 7/12/18 | REVISED SEWER LATERAL |

| | |
|---|---|
| designed | L. SERRATE |
| drawn | N. SERRATE |
| checked | L. SERRATE |
| approved | R. VARGAS |
| proj no | 16016-01 |
| scale | 1" = 20' |
| date | NOV 27, 2017 |
| cad ref | 16016-18 |

RODOLFO J. VARGAS LICENSE No. 35648 STATE OF FLORIDA PROFESSIONAL ENGINEER

RODOLFO J. VARGAS
PE # 35648

This item has been electronically signed and sealed by Rodolfo J. Vargas, PE on 7/12/18 using a digital signature. Printed copies of this document are not considered signed and sealed and signature must be verified on any electronic copies.

drawing

C-11

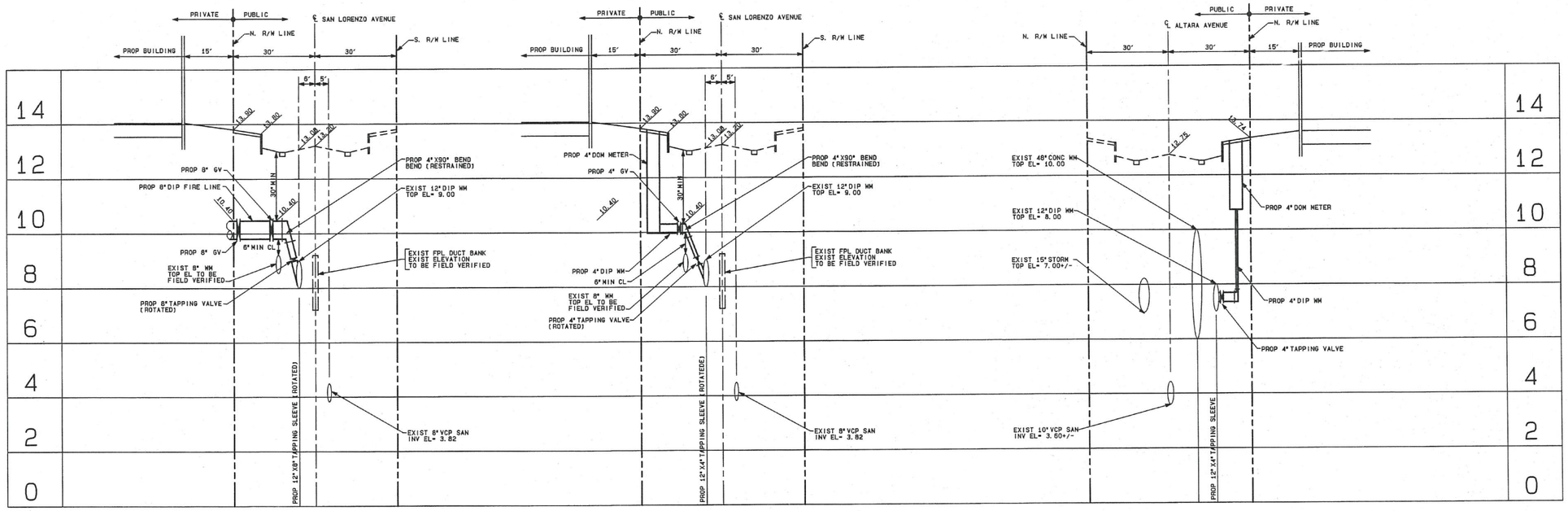


8" FIRE LINE SERVICE
SAN LORENZO AVENUE

2" DOMESTIC & 2" IRRIGATION SERVICES
SAN LORENZO AVENUE

4" DOMESTIC SERVICE
ALTARA AVENUE

## WATER PROFILES

SCALE: 1" = 20' HORIZ
SCALE: 1" = 2' VERT

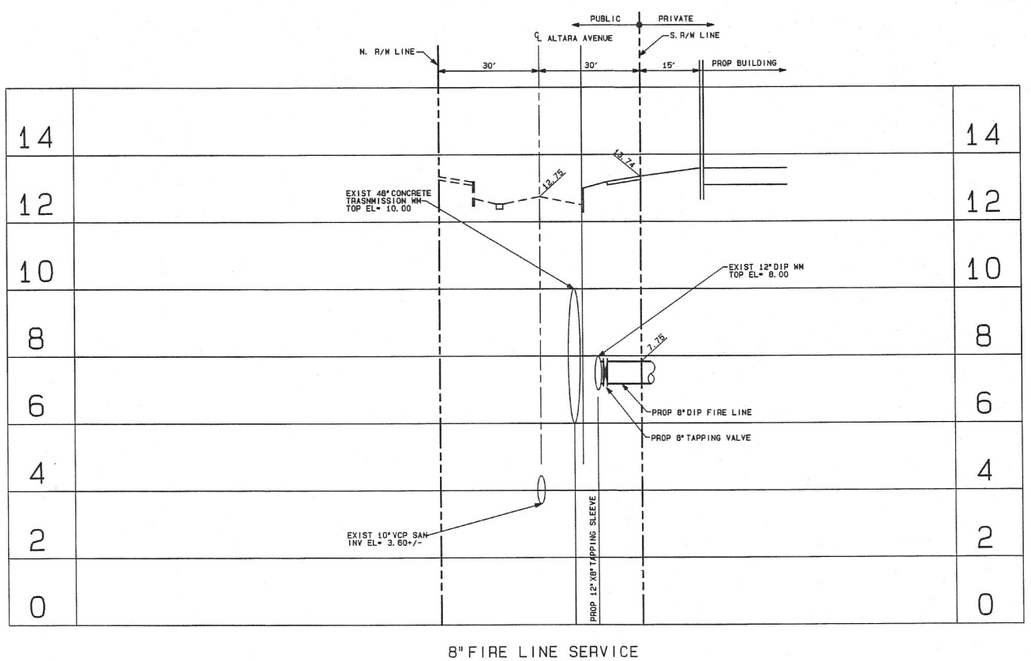


8" FIRE LINE SERVICE
ALTARA AVENUE

## WATER PROFILES

SCALE: 1" = 20' HORIZ
SCALE: 1" = 2' VERT

AGREEMENT ID# 23408

WATER PROFILES

RODOLFO J. VARGAS
LICENSE
No. 35648
STATE OF
FLORIDA
PROFESSIONAL ENGINEER

4/16/18

This item has been electronically signed and sealed by Rodolfo J. Vargas, PE on 4/16/18 using a digital signature. Printed copies of this document are not considered signed and sealed and signature must be verified on any electronic copies.


vse engineering inc
CERTIFICATE OF AUTH #5629
• CIVIL
• LAND DEVELOPMENT
• TRAFFIC AND TRANSPORTATION
8550 W. FLAGLER ST. SUITE 113, MIAMI, FLORIDA 33144
TEL. (305)551-6257 FAX (305)551-4542
e-mail: vse@vseinc.com


MERRICK PARK HOTEL
AT
4241 AURORA STREET
CITY OF CORAL GABLES, FLORIDA

| no | date | revision/issue |
|---|---|---|
| 1 | 3/24/18 | REVISED PER MDWASD COMMENTS |

| | |
|---|---|
| designed | L. SERRATE |
| drawn | N. SERRATE |
| checked | L. SERRATE |
| approved | R. VARGAS |
| proj no | 16016-01 |
| scale | 1" = 20' |
| date | AUG 9, 2017 |
| cad ref | 16016-18 |

RODOLFO J. VARGAS
LICENSE
No. 35648
STATE OF
FLORIDA
PROFESSIONAL ENGINEER
RODOLFO J. VARGAS
PE # 35648

drawing
C-12

Scale: 1" = 20'

ALLEY BETWEEN AURORA STREET AND PONCE DE LEON BLVD

SAN LORENZO AVENUE

ALTARA AVENUE

AURORA STREET

PROP BLDG

FIN FL EL = 14.08

EXIST ALLEY R/W LINE

EXIST R/W LINE

S03 04' 17" E 295.00'(R) 294.9

N03 04' 17" W 295.00'(R) 294.92'(M)

N87 49' 51" E 100.00'(R)

S87 49' 51" W 100.00'(R)

30'

CATCH BASIN OIL/SEDIMENT PROTECTION (TYPICAL)

CONSTRUCTION ENTRANCE WITH #57 ROCK (6" MINIMUM THICKNESS) AND GRADED TO PREVENT ANY OFF-SITE RUN OFF

PROPOSED 6' HIGH CHAIN LINK FENCE WITH WIND SCREEN AND 3' HIGH SILT FENCE PER FDOT INDEX NO. 102 AROUND ENTIRE PERIMETER OF CONSTRUCTION AREA

PROP 24' WIDE CONSTRUCTION GATE

EXIST FPL MH

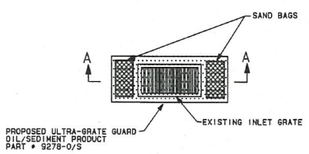


**CATCH BASIN OIL/SEDIMENT PROTECTION**

N. T. S.

IF REQUIRED

NOTE:
INSTALLATION OF ULTRA GRATE GUARD AND ULTRA CURB GUARD PRODUCTS SHOULD BE IN STRICT ACCORDANCE WITH MANUFACTURERS SPECIFICATIONS AND INSTALLATION INSTRUCTIONS.

**LEGEND:**

| | EXISTING | PROPOSED |
|---|---|---|
| CHAIN LINK FENCE WITH WIND SCREEN & SILT FENCE | | |
| CATCH BASIN OIL/SEDIMENT PROTECTION (IF REQUIRED) | | |

RODOLFO J. VARGAS
LICENSE
No. 35648
STATE OF
FLORIDA
PROFESSIONAL ENGINEER

10/25/10

SCALE: 1" = 20' 20' 10' 0' 20'

# STORM WATER POLLUTION PREVENTION PLAN


VSN engineering inc
CERTIFICATE OF AUTH #5529
• CIVIL
• LAND DEVELOPMENT
• TRAFFIC AND TRANSPORTATION
8550 W. FLAGLER ST. SUITE 113, MIAMI, FLORIDA 33144
TEL. (305)551-6267 FAX (305)551-4542
e-mail: vsn@vsneng.com


MERRICK PARK HOTEL
AT
123 AURORA STREET
CITY OF CORAL GABLES, FLORIDA

| no | date | revision/issue |
|---|---|---|
| | | |

| | |
|---|---|
| designed | L. SERRATE |
| drawn | N. SERRATE |
| checked | L. SERRATE |
| approved | R. VARGAS |
| proj no | 16016-01 |
| scale | 1" = 20' |
| date | JULY 20, 2017 |
| cad ref | 16016-90 |

RODOLFO J. VARGAS
LICENSE
No. 35648
STATE OF
FLORIDA
PROFESSIONAL ENGINEER

RODOLFO J. VARGAS
PE # 35648

drawing

SWPPP-2